MAKING MODERN LIVING POSSIBLE

Collection of Instructions

Instructions for Danfoss
Refrigeration & Air conditioning Controls

REFRIGERATION &
AIR CONDITIONING DIVISION

Catalogue

Pressure controls and thermostats

RT 260A, RT 262A, RT 265A, RT 260AL, RT 262AL, RT 263AL, RT 266AL 266
KP 98 (cross ambient) 268
RT 4, 11, 17, 34 271
RT 2, 7, 8, 12, 14, 15, 23, 24, 26 (cross ambient) 273
RT 8L, 14L, 16L, 101L, 140L 277
RT 122 280
RT 1, 1A, 5, 5A 281
RT14E, RT101E, RT107E, RT123E 286
UT 72/73 288
KP 1E, KP 7EW, KP 7 EB 289
KP cover 293
KP 44 294
KPU 296
KP 1, 1A, 5, 5A w/ goldplated contacts 300
MP 54, MP 55, MP 55A 302
KP 15, KP 15A, KP 17W, KP 17WB and KP 17B 303
KP 1A, KP 2A, KP 5A 305
RT 6W, 6B, 6S, 6AW, 6AB, 6ASRT 30AW, 30AB, 30AS, 36B, 36S TÜV ...308
KPU 312
KPU 316
KP 1, KP 1W, KP 1A,KP 2, KP 5, KP 5A, KP 6W, KP 6B, KP 7W, KP 7B,
and KP 7S 320
KP 1, KP 2, KP 5, KP 7W, KP 7B 322
KP 1, KP 1W, KP 1A,KP 2, KP 5, KP 5A, KP 6W, KP 6B, KP 7W, KP 7B,
and KP 7S For India only 325
KP 15 with gold plated contacts 327
KP 61 - 81 329
KP 15, KP 17W, KP 17B, KP 25 331
KP IP 55 enclosure 335
KPR 1, 5 336
KP 7ABS and KP 7BS 340
RT 3, 9, 10, 13 342
KP 61 - 81 344
KP 15A 348
RT1AE, RT6AEW, RT6AEB, RT6AES, RT116E, RT5E, RT117E, RT112E, ..
RT113E, RT260AE, RT262AE 352

© Danfoss A/S (RC-CM), 09-2009

INSTRUCTIONS

RT 260A, RT 262A, RT 265A
RT 260AL, RT 262AL, RT 263AL, RT 266AL

017R9506

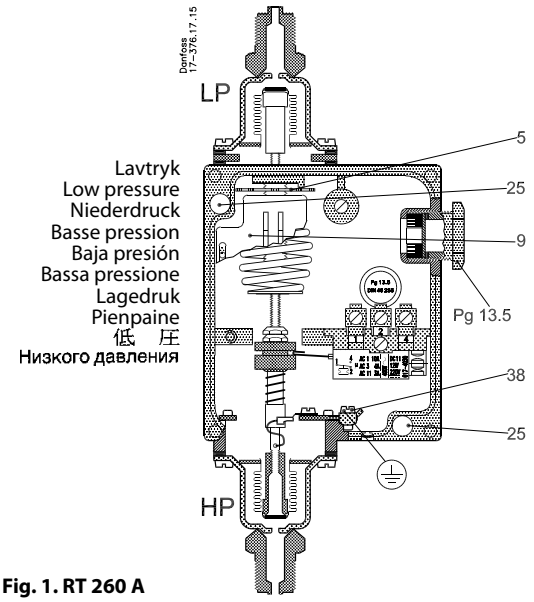

Fig. 1. RT 260 A

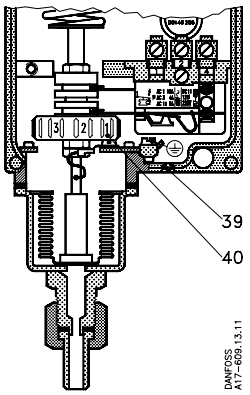

Fig. 2. RT 262 AL

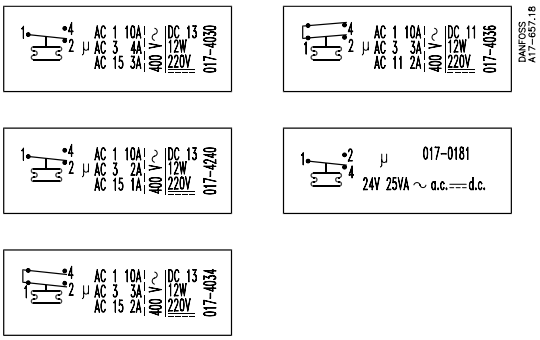

Fig. 3

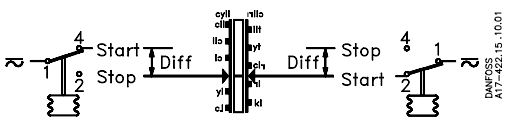

Fig. 4

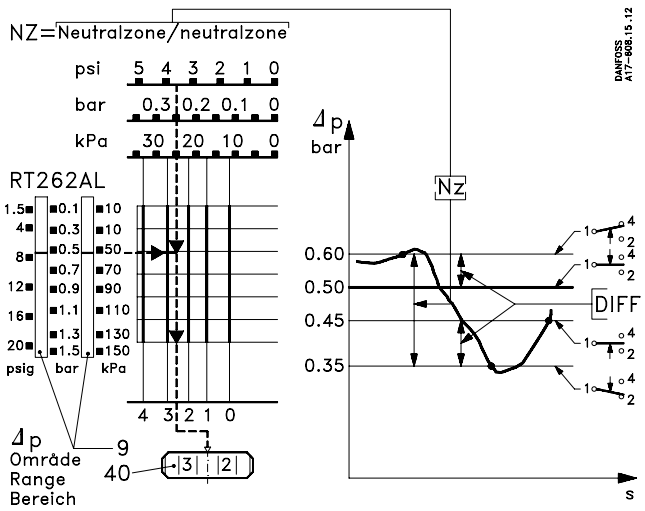

Fig. 5

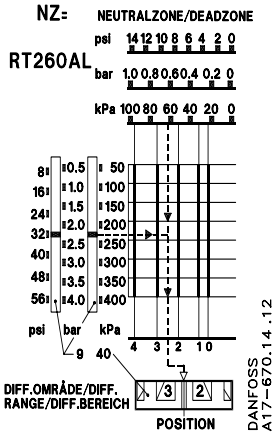

Fig. 6

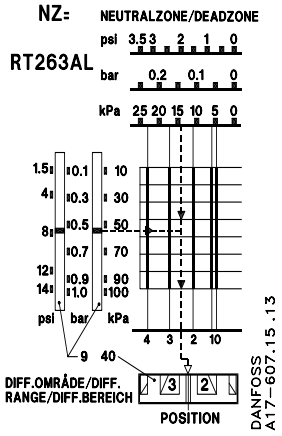

Fig. 7

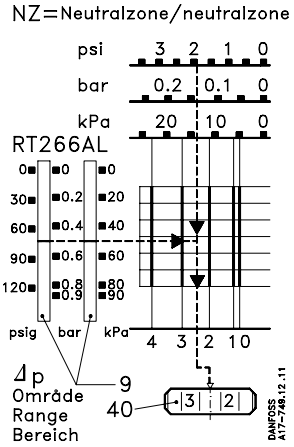

Fig. 8

© Danfoss A/S

DANSK

Differenspressostater

Tekniske data

Type	Differens-trykområde Δp bar	Arbejds-område for LP-siden bar	Fast kontakt DIFF bar	Til-ladeligt drifts-tryk PB bar
RT 260A	0.5 → 4	–1→ +18	0.3	22
RT 260A	0.5 → 6.0	–1→ +36	0.5	42
RT 260A	1.5 → 11	–1→ +31	0.5	42
RT 262A	0.1 → 1.5	–1→ +9	0.1	11
RT 265A	1 → 6	–1→ +36	0.5	42
RT 260AL	0.5 → 4	–1→ +18	0.3	22
RT 262AL	0.1 → 1.5	–1→ +9	0.1	11
RT 263AL	0.1 → 1.0	–1→ +6	0.05	7
RT 266AL	0 → 0.5	–1→ +6	0.05	7

Neutralzone, Δp Nz
RT 260AL: 0.3 bar → 0.9 bar
RT 262AL: 0.1 bar → 0.33 bar
RT 263AL: 0.05 bar → 0.23 bar
RT 266AL: 0.05 bar → 0.28 bar

Maks. prøvetryk, p' = 1.1 × PB

Tilladelig temperatur: –40°C → +70°C

Kontaktbelastning
Se kontaktdæksel eller fig. 3
Er kontaktbelastningen eksempelvis angivet som 10 (4) A, 400 V a.c. betyder det, at der maks. må tilsluttes 10 A ohmsk og 4 A induktiv belastning ved 400 V a.c. Maksimal startstrøm ved indkobling af motor må være op til syv gange den induktive belastning – dog maks. 28 A.
Kontaktsystemet opfylder betingelserne i VDE* 0660.
* VDE = Verband Deutscher Elektrotechniker

Montering
Differenspressostaten monteres på en ventiltavle eller f.eks. direkte på en kompressor. Benyt monteringshullerne (25).
Hvis apparatet kan blive udsat for vibrationer, bør det monteres på et blødt underlag.

El-tilslutning
Se fig. 4.
START = slutte. STOP = bryde DIFF = fast kontaktdifferens. Kabeldiameter: 6 mm til 14 mm.
Jordforbindelse tilsluttes jordskruen (38).

Indstilling
Det ønskede differenstryk indstilles ved hjælp af indstillingsskiven (5) under samtidig aflæsning af skalaen (9).
Den ønskede neutralzone for RT 260AL, RT 262AL, RT 263AL, RT 266AL opsøges i diagrammet. På diagrammets nederste skala aflæses den værdi, neutralzonerullen (40) skal indstilles på.

Eksempel 1
RT 262A med klemme 1 - 4 tilsluttet.
Indstillet differenstryk Δp = 0.5 bar.
RT 262A bryder ved differenstrykket 0.5 bar og slutter ved differenstrykket + kontaktdifferensen = 0.5 bar + 0.1 bar = 0.6 bar.

Eksempel 2
RT 262AL
Ønsket differenstryk Δp = 0.5 bar.
Ønsket neutralzone Nz = 0.25 bar.
Som det kan ses af diagrammet fig. 5, opnås den ønskede neutralzone på 0.25 bar ved at indstille neutralzonerullen (40) på værdien 2.5.
Slutte- og brydedifferenstrykkene for kontaktsy-stemet (se fig. 4) bliver herved, idet kontaktdiffe-rensen er 0.1 bar:
Sluttedifferenstryk for kontakterne 1 - 4 =
0.5 bar + 0.1 bar = 0.6 bar.
Brydedifferenstryk for kontakterne 1 - 4 = 0.5 bar
(= indstillingsværdi, Δp).

Sluttedifferenstryk for kontakterne 1 - 2 =
0.6 bar – 0.25 bar = 0.35 bar.
Brydedifferenstryk for kontakterne 1 - 2 =
0.35 bar + 0.1 bar = 0.45 bar.

ENGLISH

Differential pressure controls

Technical data

Type	Differential pressure range Δp bar	Working range LP side bar	Fixed contact DIFF bar	Max. working pressure MWP bar
RT 260A	0.5 → 4	–1→ +18	0.3	22
RT 260A	0.5 → 6.0	–1→ +36	0.5	42
RT 260A	1.5 → 11	–1→ +31	0.5	42
RT 262A	0.1 → 1.5	–1→ +9	0.1	11
RT 265A	1 → 6	–1→ +36	0.5	42
RT 260AL	0.5 → 4	–1→ +18	0.3	22
RT 262AL	0.1 → 1.5	–1→ +9	0.1	11
RT 263AL	0.1 → 1.0	–1→ +6	0.05	7
RT 266AL	0 → 0.5	–1→ +6	0.05	7

Neutral zone, Δp Nz
RT 260AL: 0.3 bar → 0.9 bar
RT 262AL: 0.1 bar → 0.33 bar
RT 263AL: 0.05 bar → 0.23 bar
RT 266AL: 0.05 bar → 0.28 bar

Max. test pressure, p' = 1.1 × MWP

Permissible temperature range: –40°C → +70°C

Contact load
See contact cover or fig. 3
If the contact load is given as, for example, 10 (4) A, 400 V a.c., it means that the connected load must be max. 10 A ohmic and 4 A inductive at 400 V a.c.
The permissible starting current on motor cutin can be up to seven times the inductive load,
but max. 28 A.
The switch meets the requirements of VDE* 0660.
*VDE = Verband Deutscher Elektrotechniker

Installation
The differential pressure control must be mounted on a valve panel or, for example, direct on a compressor. Use the fixing holes (25).
If the unit can be exposed to vibration, it should to be mounted on a resilient pad.

Electrical connection
See fig. 4.
START = make. STOP = break
DIFF = fixed contact differential
Cable diameter: 6 mm to 14 mm
Connect earth to the earth screw (38)

Setting
Set the required differential pressure with the setting disc (5) while at the same time reading the scale (9).
Find the required neutral zone for RT 260AL, RT 262AL, RT 263AL, RT 266AL from the diagram. The setting value for the neutral zone (40) can be read from the lowest scale on the diagram.

Example 1
RT 262A with terminals 1 - 4 connected. Set differential pressure Δp = 0.5 bar. The RT 262A breaks at a differential pressure of 0.5 bar and makes at a differential pressure + contact differential = 0.5 bar +0.1 bar = 0.6 bar.

Example 2
RT 262AL
Required differential pressure Δp = 0.5 bar.
Required neutral zone Nz = 0.25 bar.
As can be seen on the diagram, fig. 5, the required neutral zone of 0.25 bar is obtained by setting the neutral zone disc (40) at 2.5.
Because the contact differential is 0.1 bar, the make and break differential pressures for the switch are:

Make differential pressure for contacts 1 - 4 =
0.5 bar + 0.1 bar = 0.6 bar.
Break differential pressure for contacts 1 - 4 =
0.5 bar (= set value Δp).
Make differential pressure for contacts 1 - 2 =
0.6 bar – 0.25 bar = 0.35 bar.
Break differential pressure for contacts 1 - 2 =
0.35 bar + 0.1 bar = 0.45 bar.

DEUTSCH

Differenzpressostate

Technische Daten

Typ	Differenz-druck-bereich Δp bar	Arbeits-bereich für die LP-Seite bar	Feste Kontakt DIFF bar	Zul. Betriebs-über-druck PB bar
RT 260A	0.5 → 4	–1→ +18	0.3	22
RT 260A	0.5 → 6.0	–1→ +36	0.5	42
RT 260A	1.5 → 11	–1→ +31	0.5	42
RT 262A	0.1 → 1.5	–1→ +9	0.1	11
RT 265A	1 → 6	–1→ +36	0.5	42
RT 260AL	0.5 → 4	–1→ +18	0.3	22
RT 262AL	0.1 → 1.5	–1→ +9	0.1	11
RT 263AL	0.1 → 1.0	–1→ +6	0.05	7
RT 266AL	0 → 0.5	–1→ +6	0.05	7

Neutralzone, Δp Nz
RT 260AL: 0.3 bar → 0.9 bar
RT 262AL: 0.1 bar → 0.33 bar
RT 263AL: 0.05 bar → 0.23 bar
RT 266AL: 0.05 bar → 0.28 bar

Max. Prüfdruck, p' = 1.1 × PB

Zulässige Temperatur –40°C → +70°C

Kontaktbelastung
Siehe Kontaktdeckel oder Abb.3
Wenn die Kontaktbelastung z.B. mit 10 (4) A, 400 V ~ angegeben ist, bedeutet das, daß max. 10 A ohmsche und 4 A induktive Belastung bei 400 V ~ angeschlossen werden dürfen.
Der maximale Anlaufstrom darf beim Einschalten des Motors bis zu siebenmal so groß sein wie die induktive Belastung – jedoch max. 28 A.
Das Kontaktsystem erfüllt die Bedingungen in VDE* 0660.
*VDE = Verband Deutscher Elektrotechniker

Montage
Der Differenzpressostat ist an eine Ventiltafel oder z.B. direkt an einen Kompressor zu montieren. Die Montagelöcher (25) sind zu benutzen.
Wenn das Gerät Vibrationen ausgesetzt wird, sollte es auf eine weiche Unterlage montiert werden.

Elektr. Anschluß
Siehe Abb.4.
START = Ein. STOP = Aus
DIFF = feste Kontaktdifferenz
Kabeldurchmesser: 6 mm bis 14 mm
Der Erdanschluß ist an die Erdungsschraube (38) anzuschliessen.

Einstellung
Der gewünschte Differenzdruck ist mit Hilfe der Einstellscheibe (5) und unter gleichzeitigem Ablesen der Skala (9) einzustellen.
Die gewünschte Neutralzone für RT 260AL, RT 262AL, RT 263AL, RT 266AL ist auf dem Diagramm aufzusuchen. Auf der untersten Skala des Dia-grammes ist der Wert abzulesen, auf den die Neutralzonenrolle (40) eingestellt werden muß.

Beispiel 1
RT 262A mit Klemme 1 - 4 angeschlossen.
Eingestellter Differenzdruck Δp = 0.5 bar.
RT 262A schaltet aus beim Differenzdruck 0.5 bar und schaltet ein beim Differenzdruck und der Kontaktdifferenz = 0.5 bar + 0.1 bar = 0.6 bar.

Beispiel 2
RT 262AL
Gewünschter Differenzdruck Δp = 0.5 bar.
Gewünschte Neutralzone Nz = 0.25 bar.
Wie auf dem Diagramm Abb. 5 zu sehen ist, wird die gewünschte Neutralzone von 0.25 bar durch Einstellen der Neutralzonenrolle (40) auf den Wert von 2.5 erreicht.
Da die Kontaktdifferenz 0.1 bar beträgt, nehmen die Ein- und Ausschaltdifferenzdrücke für das Kontakt-system (siehe Abb. 4), folgende Werte an:
Einschaltdifferenzdruck für die Kontakte 1 - 4 =
0.5 bar + 0.1 bar = 0.6 bar.
Ausschaltdifferenzdruck für die Kontakte 1 - 4 =
0.5 bar (= Einstellwert, Δp).
Einschaltdifferenzdruck für die Kontakte 1 - 2 =
0.6 bar - 0.25 bar = 0.35 bar.
Ausschaltdifferenzdruck für die Kontakte 1 - 2 =
0.35 bar + 0.1 bar = 0.45 bar.

INSTRUCTIONS

KP 98
(cross ambient)

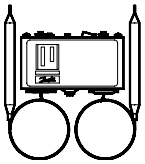

060R9759

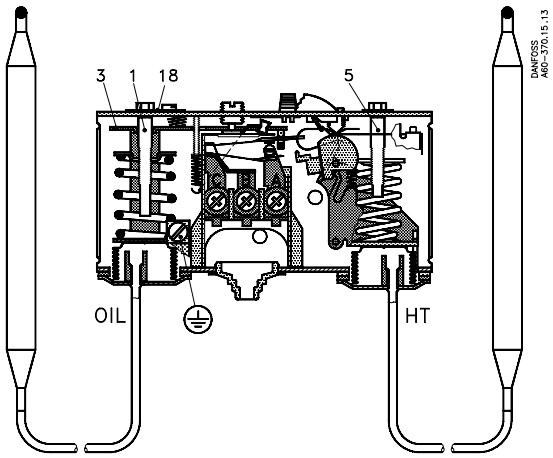

Fig. 1

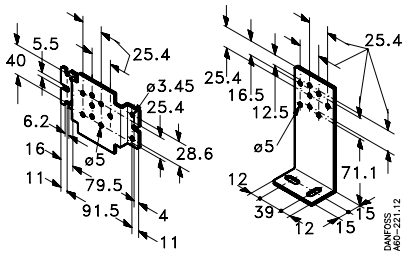

Fig. 2 060-1055 060-1056

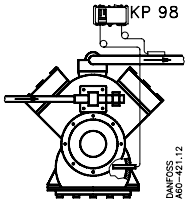

Fig. 3

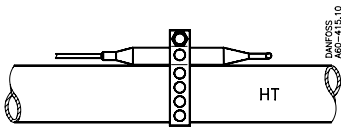

Fig. 4

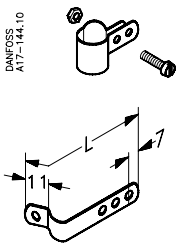

Fig. 5 993N3505

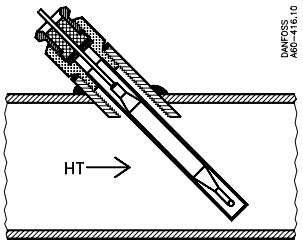

Fig. 6

Ms: 993N3568
St 18/8: 993N3615

Fig. 7

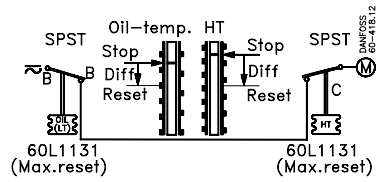

Fig. 8

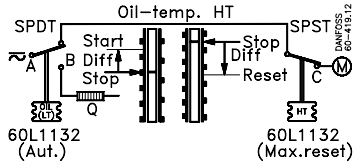

Fig. 9

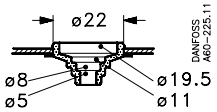

Fig. 10

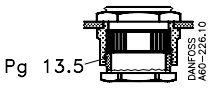

50 stk./pieces/
Stck./pièces
060-1059

Fig. 11

50 stk./pieces/
Stck./pièces
060-1061

Fig. 12

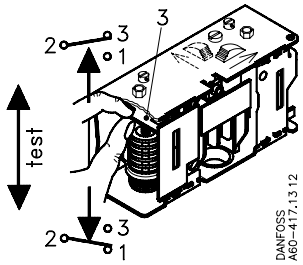

Fig. 13

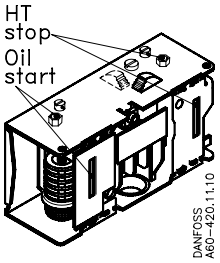

Fig. 14

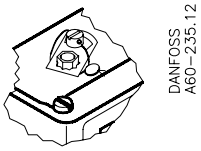

Fig. 15

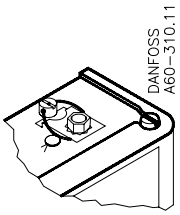

Fig. 16

2 stk./pieces/
Stck./pièces
060-1057

Fig. 17

© Danfoss A/S

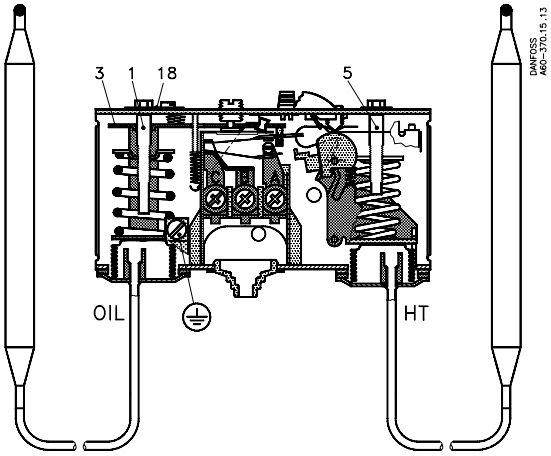

Fig. 1

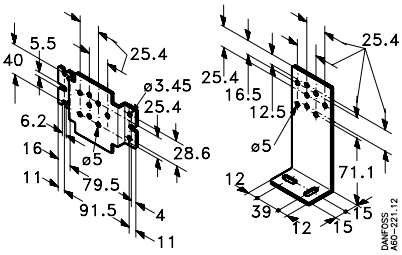

Fig. 2 **060-1055** **060-1056**

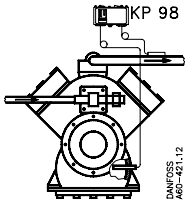

Fig. 3

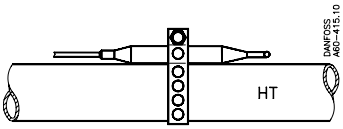

Fig. 4

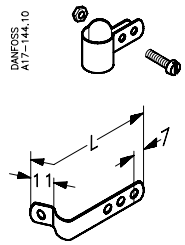

Fig. 5 **993N3505**

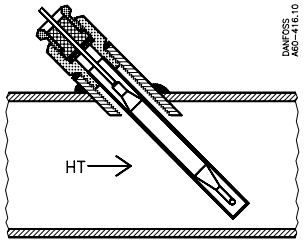

Fig. 6

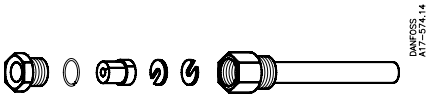

Ms: 993N3568
St 18/8: 993N3615

Fig. 7

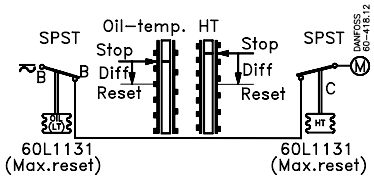

Fig. 8

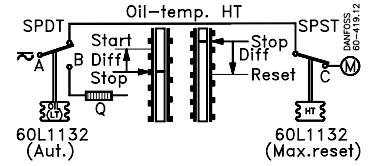

Fig. 9

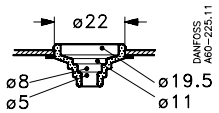

Fig. 10

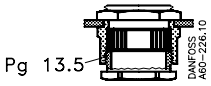

50 stk./pieces/
Stck./pièces
060-1059

Fig. 11

50 stk./pieces/
Stck./pièces
060-1061

Fig. 12

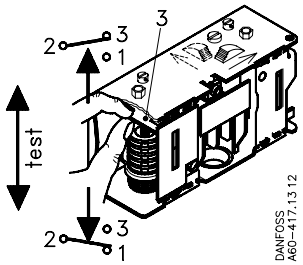

Fig. 13

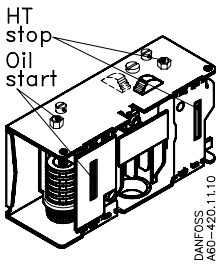

Fig. 14

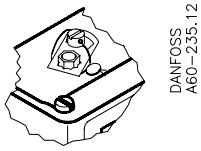

Fig. 15

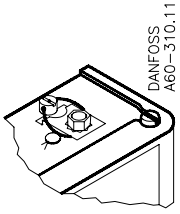

Fig. 16

2 stk./pieces/
Stck./pièces
060-1057

Fig. 17

Compressor protection thermostat

(Cross ambient = adsorption charged)

Fig. 1

1. Setting spindle, "OIL" (LT) (setting of max. oil temperature)
3. Main arm
5. Setting spindle, "HT" (setting of max. high-pressure gas temperature)
18. Locking plate

Technical data

Function

The function at a rise or drop in temperature appears from figs. 8 and 9.

Permissible ambient temperature for thermostat housing.

–40 to +65°C (+80°C for max. 2 hours)

Max. permissible bulb temperature

"OIL" sensor on 060L1131: 150°C;
on 060L1132: 100°C.
"HT" bulb: 250°C

Enclosure and tightness

IP 44 in accordance with IEC 144 and DIN 40050. This grade of enclosure is obtained when the unit is fitted on a flat panel or on a bracket. The bracket must be placed in such a way that all open holes are covered.

Contact load

See the scale of the unit.

Application in accordance with UL-requirements:
120 V a.c.: 16 FLA, 96 LRA
240 V a.c.: 8 FLA, 48 LRA
240 V d.c.: 12 W pilot duty

Mounting

The two bulbs are to be placed as shown on fig. 3, 4 and 6.

Fig. 2

2 types of mounting brackets with screws and washers. To be ordered separately.
4 extra screws (M4 × 5) and washers can be supplied against code number 060-1054.
NB: If other screws are used, make sure that they do not project more than 1.5 mm into the unit.

Fig. 3

Compressor with KP 98.

Fig. 4

Sensor fitted to tube.

Fig. 5

Clamp. To be ordered separately.

Fig. 6

Bulb in pocket.

Fig. 7

Pocket, packing and union nut for insertion in $^1/_2$ BSP connector. To be ordered separately. To improve the heat transfer from pocket to bulb a heat conducting paste can be used. Code No. *041E0110*.

Electrical connections
Fig. 8 and 9

Fig. 10

Cable entry of plastic supplied. Can be used for 6-14 mm cable.

Fig. 11

Pg 13.5 screwed cable connection with special nut to be ordered separately. Can be used for 6-14 mm cable.

For 8-16 mm cable a standard Pg 16 screwed cable connection can be used.

Fig. 12

Extra nut for Pg 13.5 screwed cable connection. To be ordered separately.

Testing
Fig. 13

The main arm (3) is tilted.
When testing, the "RESET" knobs must be activated simultaneously with the tilting of the main arm (3).
NB. Use only the testing method shown.

Setting
Fig. 8, 9 and 14

"START" = starting temperature
"STOP" = stop temperature
"DIFF" = differential

Units with max./max. reset (060L1131)
Fig. 8 and 14

The highest oil and high-pressure gas temperatures are set on the "OIL" and "HT" scales respectively.
The "OIL" differential is fixed at 14°C.
The "HT" differential is fixed at 25°C.
The plant is restarted after stop by depressing the "RESET" buttons. Restart cannot take place until the temperature has dropped by a value equal to the difference in question.

Units with aut./max. reset (060L1132)
Fig. 9 and 14

The lowest oil temperature is set on the "OIL" scale.
The highest high-pressure gas temperature is set on the "HT" scale.
The "OIL" differential is fixed at 12°C.
The "HT" differential is fixed at 25°C.
If the oil temperature is too low the compressor stops and the heating element Q in the crankcase is cut in. Restart is automatic when the temperature has risen 12°C above the set value.
If the high-pressure gas temperature is too high the compressor stops. Restart is carried out as described under "Fig. 8 and 14".

Locking the setting
Fig. 15 and 16

Both the "OIL" and the "HT" spindle can be locked with the locking plate. If sealing is required a sealing screw is used.

Fig. 17

Sealing screw. To be ordered separately.

INSTRUCTIONS

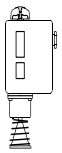

RT 4, 11, 17, 34

017R9502

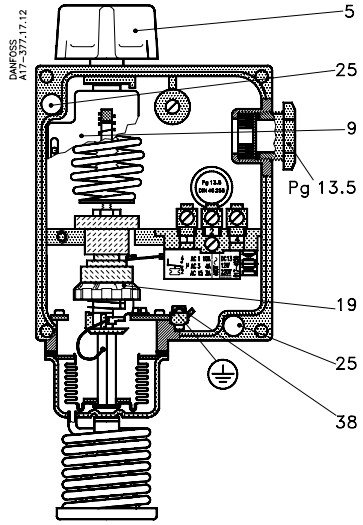

Fig. 1

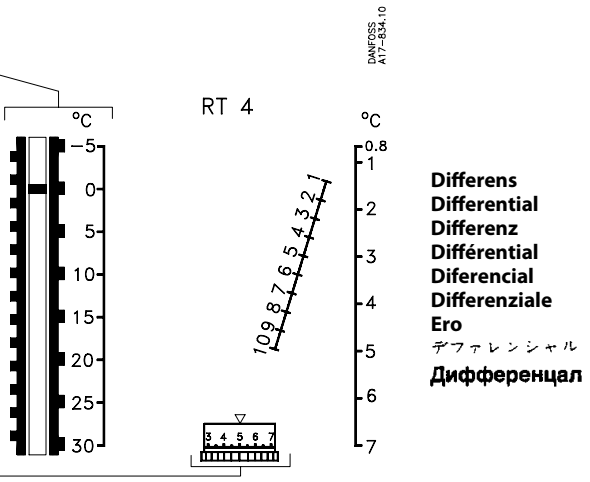

Differens
Differential
Differenz
Différential
Diferencial
Differenziale
Ero
デファレンシャル
Дифференцал

Fig. 2

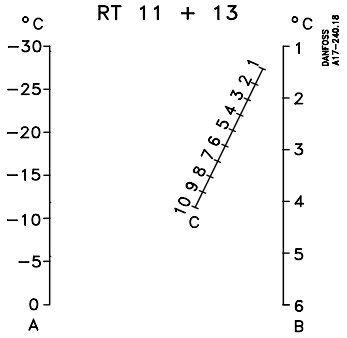

Fig. 3

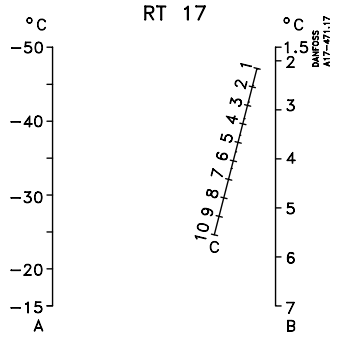

Fig. 4

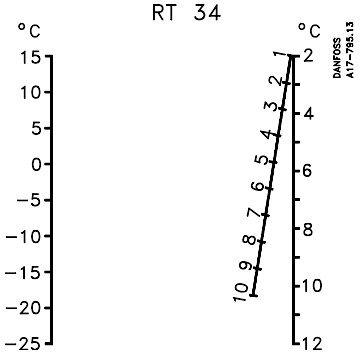

Fig. 5

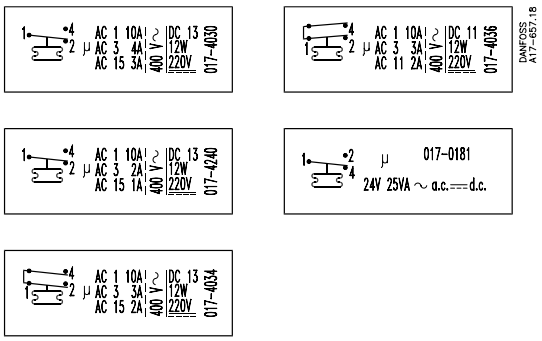

Fig. 6

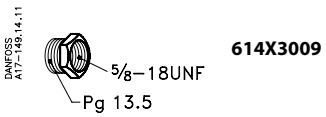

614X3009

Fig. 7

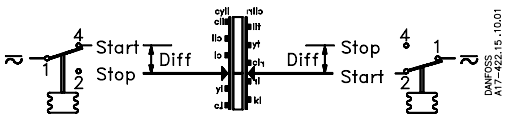

Fig.8

© Danfoss A/S

Room thermostats

Technical data

Type	Range °C (°F)	Max. permissible bulb temperature °C (°F)
RT 4	–5 to +15 (+25 to +85)	+70
RT 11	–30 to 0 (–25 to +32)	+70
RT 17	–50 to –15 (+58 to +5)	+70
RT 34	–25 to +15 (+10 to +60)	+100

Ambient temperature: –50°C to +70°C (–50T70). Min. temperature variation rate: < 1K/15 minutes. Enclosure: IP 66 to IEC 144.
Contact load: See switch cover or fig. 6.
The marking, e.g. 10 (4) A, 400 V ~ a c. means that max. connection current is 10 A ohmic and 4 A inductive at 400 V.
The max. starting current on motor cutin (L.R.) may be up to seven times the inductive load – but max. 28 A.
RT complies with conditions specified in VDE* 0660, Prüfklasse II.
*VDE = Verband Deutscher Elektrotechniker

Fitting

The thermostat should be fitted in the room in which the temperature is to be controlled. Use the mounting holes (25).
It should be fitted so that the sensor is exposed to the free flow of room air. However, the sensor must not be directly affected, for example, by the air flow from a fan.
The thermostat must not be fitted next to a door, since opening and closing of the door will result in spurious temperature fluctuations at the sensor.

Mains connection. See Fig. 8
START = make. STOP = break. DIFF. = differential. Cable diameter: 6 to 14 mm.
The earth terminal (38) should be connected to earth.

RT 4 with a heating coil in the bellows (code No. 017-5037) should be connected as shown in fig. 9.

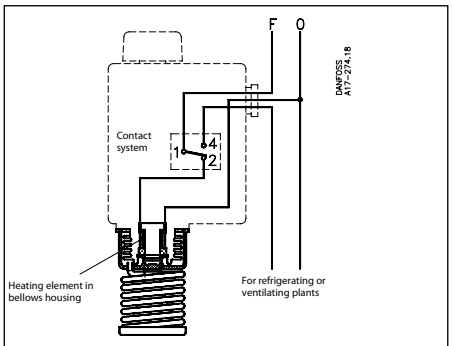

Fig. 9

Accessories

Special type screwed cable entry. See fig. 7.

Adjustment.

Set the thermostat for minimum actuating temperature. (Range setting). Setting is done by rotating the knob (5) (fig. 1), and at the same time reading the main scale (9) (fig. 1).

The differential is set by rotating the differential adjusting nut (19) (fig. 2) according to the nomogram concerned (fig. 2 - 5).
Maximum actuating temperature is the sum of the temperature setting and the differential.

Example: Thermostat RT 4.
Range setting (min. actuating temp.) = 0°C (+32°F). Differential setting with differential adjusting nut = 5.
Actual differential = 3°C (5.4°F).
Maximum actuating temperature =
0 + 3 = 3°C (32 + 5.4 = 37.4°F).

Connection to terminals 1 - 4:
The switch **breaks** the circuit when the temperature has fallen to 0°C(+32°F), and makes it when the temperature has again risen to +3°C (+5.4°F).

Connection to terminals 1-2:
The switch **makes** the circuit when the temperature has fallen to 0°C (+32°F), and breaks it when the temperature has again risen to +3°C (+5.4°F).

In general, turning the knob automatically moves both the maximum and minimum actuating temperatures (break and make) up or down because of the fixed differential.
On the other hand, turning the differential adjusting nut only alters the maximum actuating temperature.

RI.5E.C2.72 © Danfoss A/S

INSTRUCTIONS

RT 2, 7, 8, 12, 14, 15, 23, 24, 26 (cross ambient)

017R9500

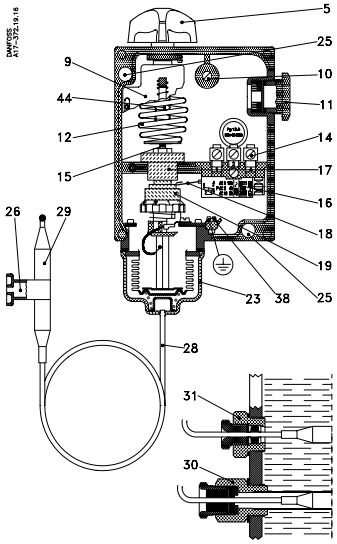

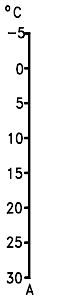

Fig. 1

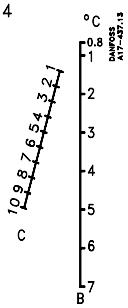

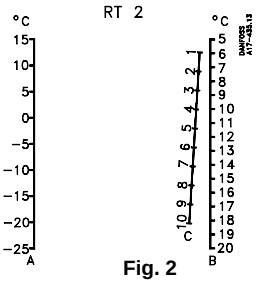

Fig. 2

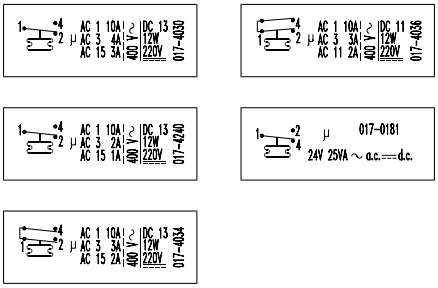

Fig. 3

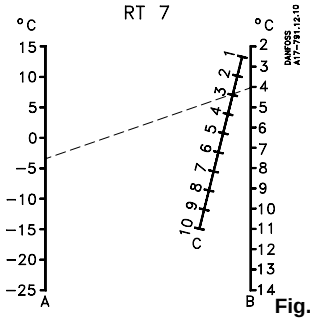

Fig. 4

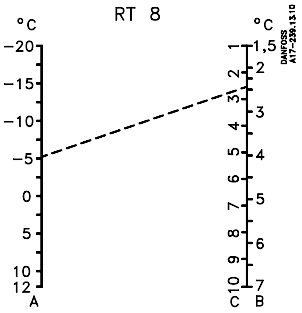

Fig. 5

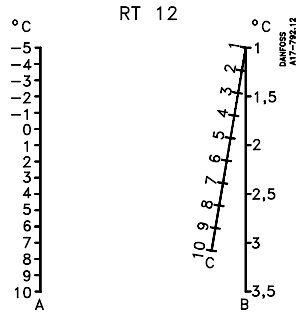

Fig. 6

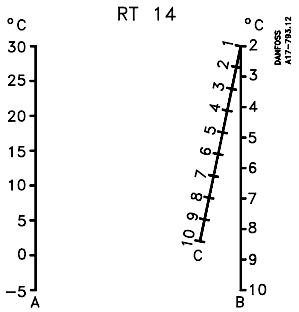

Fig. 7

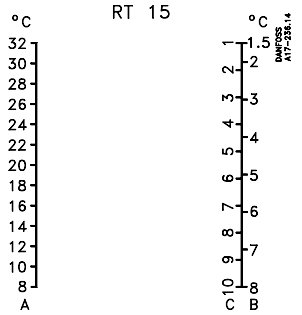

Fig. 8

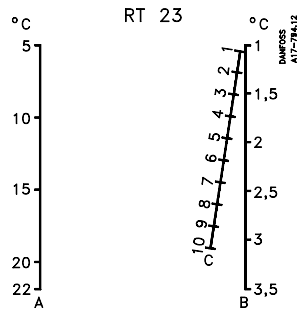

Fig. 9

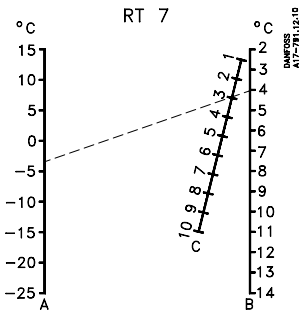

Fig. 10

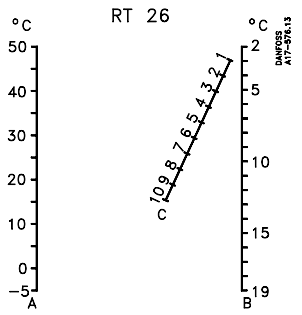

Fig. 11

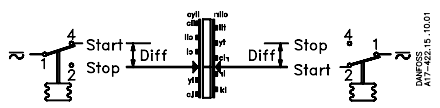

Fig. 12

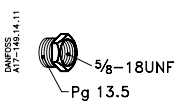

Pg 13.5 × 5/8 in -18 UNF
614X3009

Fig. 13

© Danfoss A/S

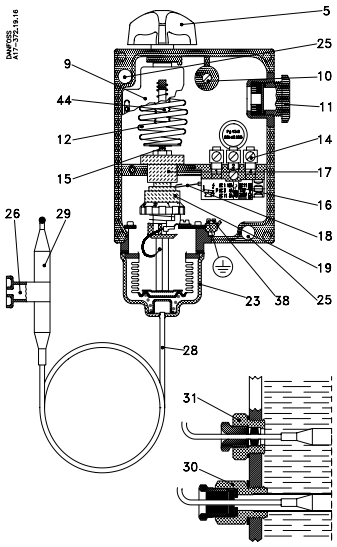

Fig. 1

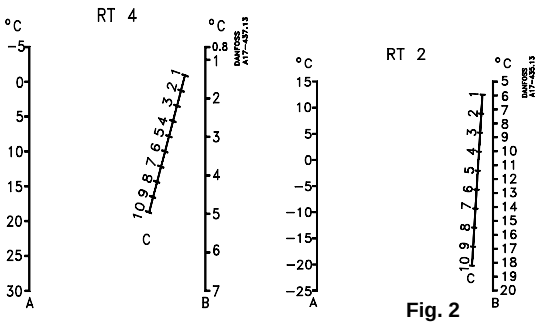

Fig. 2

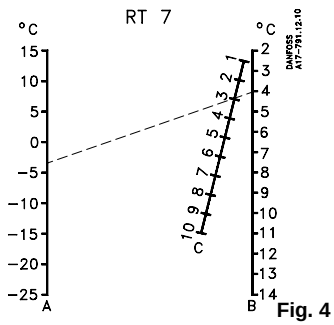

Fig. 4

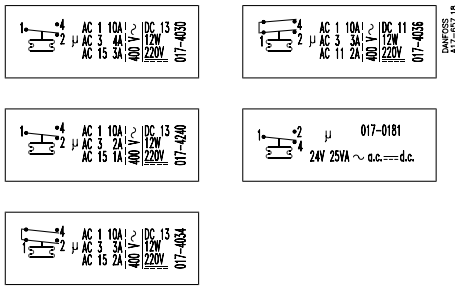

Fig. 3

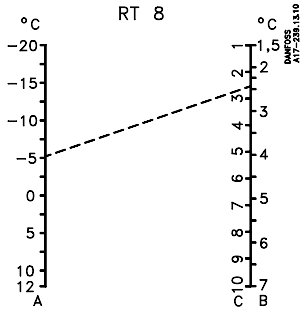

Fig. 5

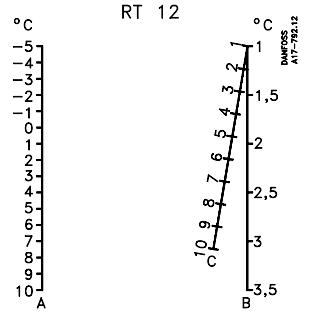

Fig. 6

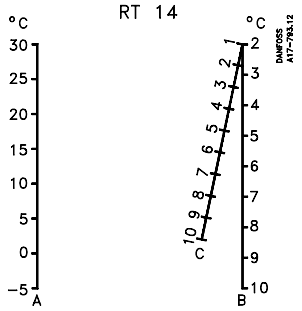

Fig. 7

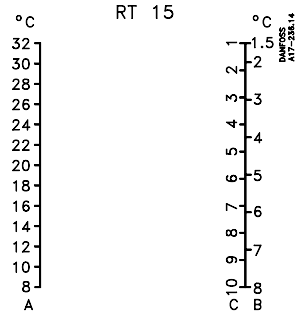

Fig. 8

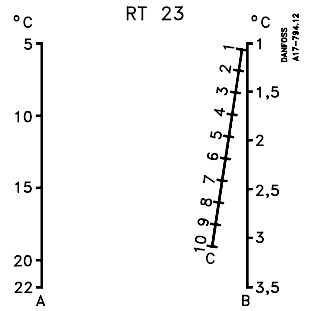

Fig. 9

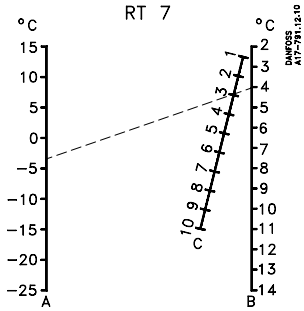

Fig. 10

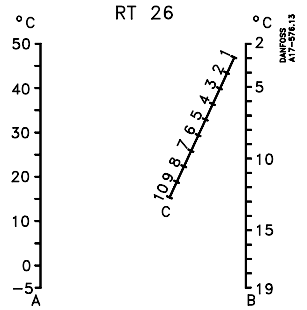

Fig. 11

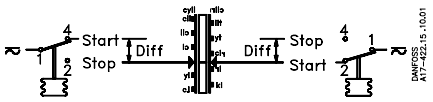

Fig. 12

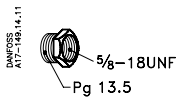

Pg 13.5 × 5/8 in -18 UNF
614X3009

Fig. 13

DANSK

Termostater

Tekniske data

Fyldning	Type	Område °C	Maks. till. føler-temperatur °C
Adsorp-tion	**RT 2**	–25 - +15	+150
	RT 7		
	RT 8	–20 - +12	+145
	RT 12	–5 - +10	+65
	RT 14	–5 - +30	+150
	RT 15	+8 - +32	
	RT 23	+5 - +22	+ 85
	RT 24	+15 - +34	+110
	RT 25	–5 - +50	+150

Omgivelsestemperatur: –50°C til +70°C (–50T70).
Min. temperaturændringshastighed
< 1K/15 minutter.
Kapsling: IP 66 iht. IEC 144.
Kontaktbelastning: Se kontaktdækslet eller fig. 3. Mærkningen f.eks. 10 (4) A, 400 V ~ a.c. angiver, at der maks. må tilsluttes 10 A ohmsk og 4 A induktiv belastning ved 400 V.
Den maksimale startstrøm ved indkobling af motor (L.R.) må være op til syv gange den induktive belastning – dog maks. 28 A. RT opfylder betingelserne i VDE*0660, Prüfklasse II.
* VDE = Verband Deutscher Elektrotechniker

Montering
Benyt monteringshullerne 25.
Føleren fastgøres på væggen ved hjælp af en føler holder 26.
Ønskes føleren monteret i en vand- eller brinetank, kan dette udføres enten med en kapillarrørspakdåse 31 eller ved hjælp af et dykrør 30.
31 og 30 kan leveres som tilbehør. Se »Tilbehør«.

El-tilslutning. Se fig. 12
START = slutte. STOP = bryde. DIFF = differens.
Kabeldiameter: 6 til 14 mm
Jordforbindelse tilsluttes jordskruen 38.

Tilbehør

1/2 RG kapillarrørspakdåse (pos.31)	017-4220
Sml. dykrør for følerlængder op til 110 mm (pos. 30)	993N3568
Sml. dykrør for følerlængder op til 180 mm (pos. 30)	993N3569
Tilbehørspose med 2 stk. følerklemmer	993N3500
Tilbehørspose med følerholder til vægmontage,4 stk. kapillarrørsbøjler og 9 stk. 12 mm stifter (pos. 26)	017-4157
Spec. kabelforskruning, Pg 13.5 udv. × 5/8 in - 18 UNF indv. (fig. 13)	614X3009

Indstilling. Se fig. 1, 2 og 12
Termostaten indstilles på laveste aktiverings-temperatur
(områdeindstilling). Indstillingen udføres med håndknappen 5 under samtidig aflæsning af hoved skalaen 9.
Differensen indstilles med differensrullen 19 efter det pågældende nomogram.
Højeste aktiveringsstemperatur er lig summen af indstillingstemperatur og differens.

Eksempel: Termostat RT 2
Områdeindstilling (laveste aktiveringstemp.)
= + 10°C.
Differensindstilling med differensrullen = 5.
Opnået differens = 12°C.
Højeste aktiveringstemperatur = 10 + 12 = 22°C.

Tilslutning til klemme 1-4:
Kontaktsystemet **bryder**, når temperaturen er faldet til +10°C og slutter, når temperaturen igen er steget til +22°C.

Tilslutning til klemme 1-2:
Kontaktsystemet **slutter**, når temperaturen er faldet til +10°C og bryder, når temperaturen igen er steget til +22°C.

Generelt gælder, at en drejning på håndknappen automatisk flytter både højeste og laveste aktiveringstemp. (bryde og slutte) op eller ned på grund af den uændrede differens. En drejning på differensrullen vil derimod kun ændre den højeste aktiveringstemp.

ENGLISH

Thermostats

Technical Data

Charge	Type	Range °C	Max. per-missible bulb temperature °C
Adsorp-tion	**RT 2**	–25 - +15	+150
	RT 7		
	RT 8	–20 - +12	+145
	RT 12	–5 - +10	+65
	RT 14	–5 - +30	+150
	RT 15	+8 - +32	
	RT 23	+5 - +22	+ 85
	RT 24	+15 - +34	+110
	RT 25	–5 - +50	+150

Ambient temperature: –50°C to +70°C (–50T70).
Min. temperature variation rate: < 1K/15 minutes.
Enclosure: IP 66 to IEC 144.
Contact load: See switch cover or fig.3.
The marking, e.g.10 (4) A, 400 V ~ a.c. means that max. connection current is 10 A ohmic and 4 A inductive at 400 V. The max. starting current on motor cutin (L.R.) may be up to seven times the inductive load - but max. 28 A.
RTcomplies with conditions specified in VDE*0660, Prüfklasse II.
*VDE = Verband Deutscher Elektrotechniker

Fitting
Use the mounting holes 25.
The bulb should be fixed to the wall by means of a bulb holding bracket 26.
If it is desired to install the bulb in a water or brine tank, this can be done by using either a capillary stuffing box 31 or a bulb pocket 30.
31 and 30 can be obtained as accessories. See “Accessories “.

Mains Connection. See fig. 12
START = make. STOP = break. DIFF = differential.
Cable diameter: 6-14 mm
The earth terminal 38 should be connected to earth.

Accessories

1/2 in BSP capillary stuffing box (pos. 31)	017-4220
Bulb pocket assembly for bulb lengths of up to 110 mm (pos. 30)	993N3568
Bulb pocket assembly for bulb lengths of up to 180 mm (pos. 30)	993N3569
Accessory kit with 2 bulb clips	993N3500
Accessory kit with bulb holding bracket for wall mounting, 4 capillary tube bows, and 9 nails 12 mm (pos. 26)	017-4157
Special type screwed cable entry, Pg 13.5 ext. × 5/8 in - 18 UNF int. (fig.13)	614X3009

Adjustment. See figs. 1, 2 and 12
Set the thermostat for minimum actuating temperature (range setting). Setting is done by rotating the knob 5, at the same time reading the main scale 9.
The differential is set by rotating the differential adjusting nut 19 according to the nomogram concerned.
Maximum actuating temperature is the sum of the temperature setting and the differential.

Example: Thermostat RT 2
Range setting (min. actuating temp.) = +10°C
Differential setting with differential adjusting nut = 5.
Actual differential = 12°C
Max. actuating temperature = 10 + 12 = 22°C

Connection to terminals 1-4:
The switch **breaks** the circuit when the temperature has fallen to +10°C, and makes it when the temperature has again risen to +22°C

Connection to terminals 1-2:
The switch **makes** the circuit when the temperature has fallen to +10°C and breaks it when the temperature has again risen to +22°C

In general, turning the knob automatically moves both the maximum and minimum actuating temperatures (break and make) up or down because of the fixed differential.
On the other hand, turning the differential adjusting nut only alters the maximum actuating temperature.

DEUTSCH

Termostate

Technische Daten

Füllung	Typ	Bereich °C	Max. zul. Fühler-temperatur °C
Adsorp-tion	**RT 2**	–25 - +15	+150
	RT 7		
	RT 8	–20 - +12	+145
	RT 12	–5 - +10	+65
	RT 14	–5 - +30	+150
	RT 15	+8 - +32	
	RT 23	+5 - +22	+ 85
	RT 24	+15 - +34	+110
	RT 25	–5 - +50	+150

Umgebungstemperatur: –50°C bis +70°C (–50T70).
Min. Temperaturänderungsgeschwindigkeit:
< 1K/15 Minuten.
Schutzart: IP 66 nach IEC 144.
Schaltleistung: Siehe Kontaktdeckel oder Abb.3.
Die Kennzeichnung, z.B.10 (4) A, 400 V ~ a.c., gibt an, daß bei 400 V maximal 10 A ohm’sche und 4 A induktive Belastung angeschlossen werden dürfen.
Der maximale Einschaltstrom beim Einschalten eines Motors (L.R.) darf bis zum siebenfachen der induktiven Belastung betragen – jedoch max.28 A.
RT genügt den Bedingungen für Prüfklasse II nach VDE 0660.

Montage
Montagelöcher 25 benutzen.
An der Wand wird der Fühler mit Hilfe eines Fühlerhalters 26 befestigt.
Für die Montage des Fühlers in einem Wasser- oder Soletank kann eine Kapillarrohrstopfbuchse 31oder ein Tauchrohr 30 verwendet werden.
31 und 30 sind als Zubehör lieferbar.
Siehe »Zubehör«.

Elektrischer Anschluß. Siehe Abb. 12
START = Schließen. STOP = Öffnen.
DIFF. = Differenz.
Kabeldurchmesser: 6 bis 14 mm.
Die Erdleitung ist an die Erdungsschraube 38 anzuschießen.

Zubehör

Kapillarrohrstopfbuchse, R 1/2 (pos. 31)	017-4220
Komplettes Tauchrohr für Fühler-längen bis zu 110 mm (Pos.30)	993N3568
Komplettes Tauchrohr für Fühler-längen bis zu 180 mm (Pos. 30)	993N3569
Zubehörbeutel mit 2 Stck. Fühler-klemmen	993N3500
Zubehörbeutel mit Fühlerhalter für Wand-montage, 4 Stck. Kapillarrohrbügeln und 9 Stck.12 mm-Stiften (Pos. 26)	017-4157

Besondere Kabelverschraubung, Pg 13.5
aussen × 5/8 in - 18 UNF innen
(Abb. 13) 614X3009

Einstellung. Siehe Abb. 1, 2 und 12
Der Thermostat ist auf die untere Ansprechtemperatur einzustellen (Bereichseinstellung). Die Einstellung erfolgt mit dem Einstellknopf 5 unter gleichzeitigem Ablesen der Hauptskala 9. Die Differenz wird mit der Differenzrolle 19 auf Grund des jeweiligen Nomogramms eingestellt. Die obere Ansprechtemperatur ist gleich der Summe von Einstelltemperatur und Differenz.

Beispiel: Thermostat RT 2
Bereichseinstellung (untere Ansprechtemperatur) = +10°C.
Differenzeinstellung mit der Differenzrolle = 5.
Erreichte Differenz = 12°C.
Obere Ansprechtemperatur = 10 + 12 = 22°C.

Anschluß an Klemmen 1-4:
Das Kontaktsystem **öffnet**, wenn die Temperatur auf +10°C abgefallen ist, und schliesst, sobald die Temperatur wieder auf +22°C angestiegen ist.

Anschluß an Klemmen 1-2:
Das Kontaktsystem schließt, wenn die Temperatur auf +10°C abgefallen ist, und öffnet, sobald die Temperatur wieder auf +22°C angestiegen ist.

Allgemeln gilt: Beim Drehen des Einstellknopfes wird sowohl die obere als auch die untere Ansprechtemperatur (Öffnen und Schließen) automatisch um den gleichen Wert verstellt, weil die Differenz unverändert ist.
Beim Drehen der Differenzrolle wird dagegen nur die obere Ansprechtemperatur verändert.

FRANÇAIS

Thermostats

Caractéristiques techniques

Charge	Type	Plage °C	Température de bulbe max. admiss. °C
Adsorption	**RT 2**	–25 - +15	+150
	RT 7		
	RT 8	–20 - +12	+145
	RT 12	–5 - +10	+65
	RT 14	–5 - +30	+150
	RT 15	+8 - +32	
	RT 23	+5 - +22	+ 85
	RT 24	+15 - +34	+110
	RT 25	–5 - +50	+150

Température ambiante: –50°C à +70°C (–50T70).
Vitesse minimale de changement de température: < 1K/15 minutes.
Etanchéité: IP 66 selon IEC 144.
Charge des contacts: Voir le couvercle de contact ou la fig. 3.
La marquage de, par exemple, 10 (4) A, 400 V ~ c.a., indique qu'au maximum, il est admis de raccorder une charge ohmique de 10 A et une charge inductive de 4 A sous 400 V.
Le courant de démarrage maximal à l'enclenchement du moteur (L.R.) est admis à sept fois la charge inductive – toutefois au maximum de 28 A.
RT accomplit les prescriptions des normes VDE* 0660, classe d'essai II.
* VDE = Verband Deutscher Elektrotechniker
(Association des Ingénieurs Électriciens Allemands).

Montage
Utiliser les trous de montage 25.
Fixer le bulbe sur la paroi à l'aide d'un portebulbe 26.Si on désire monter le bulbe dans un bac à eau ou à saumure, utiliser soit un presse-étoupe capillaire 31 soit un tube plongeur 30.
31 et 30 peuvent être livrés comme accessoires. Voir: «Accessoires».

Raccordement électrique.
Voir fig. 12
START = enclencher.
STOP = déclencher.
DIFF. = différentiel.
Diamètre du câble: 6 à 14 mm. Raccorder la mise à terre à la vis 38.

Accessoires
Presse-étoupe capillaire tube gaz 1/2
(pos. 31) 017-4220
Tube plongeur assemblé pour longueurs de bulbe jusqu'à 110 mm (pos. 30) 993N3568
Tube plongeur assemblé pour longueurs de bulbe jusqu'à 180 mm (pos. 30) 993N3569
Sac à accessoires avec 2 pince-bulbe 993N3500
Sac à accessoires avec porte-bulbe pour montage mural,4 colliers de capillaire et 9 goupilles de 12 mm (pos. 26) 017-4157
Raccord de câble spécial, Pg 13,5, ext. ∞ 5/8 in – 18 UNF int. (fig. 13) 614X3009

Réglage. Voir fig. 1, 2 et 12
Régler le thermostat sur la temp. d'actionnement la plage basse (réglage de la plage). Faire le réglage au moyen du bouton 5, en lisant simultanément l'échelle principale 9.
Régler le différentiel à l'aide du rouleau différentiel 19 d'après le nomogramme considéré.
La température d'actionnement la plus élevée est égale à la somme de la température de réglage et du différentiel.

Exemple: Thermostat RT 2
Réglage de la plage (temp. d'actionnement la plus basse) = +10°C.
Réglage du différentiel à l'aide du rouleau différentiel = 5.
Différentiel obtenu = 12°C.
Température d'actionnement la plus élevés = 10 + 12 = 22°C.

Raccordement aux bornes 1 - 4:
Le système de contact **ouvre** le circuit électrique quand la température est descendue à +10°C et le ferme quand la température est remontée à +22°C.

Raccordement aux bornes 1 - 2:
Le système de contact **ferme** le circuit électrique quand la temp. est descendue à +10°C et l'ouvre quand la temp. est remontée à +22°C.

En général, en tournant le bouton manuel, on déplace automatiquement vers le haut ou vers le bas tant la température d'actionnement la plus élevée que celle la plus basse (de coupure et de fermeture) car la valeur du différentiel reste inchangée.

Un mouvement du rouleau différentiel ne fait varier, par contre, que la temp. d'actionnement la plus élevée.

ESPAÑOL

Termostatos

Características técnicas

Carga	Tipo	Gama °C	Temperatura máxima permisible del bulbo °C
Adsorción	**RT 2**	–25 - +15	+150
	RT 7		
	RT 8	–20 - +12	+145
	RT 12	–5 - +10	+65
	RT 14	–5 - +30	+150
	RT 15	+8 - +32	
	RT 23	+5 - +22	+ 85
	RT 24	+15 - +34	+110
	RT 25	–5 - +50	+150

Temperatura ambiente: –50°C a +70°C (–50T70).
Velocidad mínima de variación de la temperatura <1K/15 min.

Protección: IP 66 según IEC 144.
Carga de los contactos: véase tapa del termostato o figura 3.
La inscripción, por ejemplo 10 (4) A, 400 V ~ c.a. significa que la corriente de conexión máxima es de 10 A con cargo ohmica y de 4 A con cargo inductiva, a 400 V.
La corriente de arranque máxima en el momento de la conexión del motor (L.R.) puede ser de hasta 7 veces la corriente con cargo inductiva (máx. 28 A).
RT satisface las condiciones estipuladas en VDE* 0660, clase de prueba II.
*VDE = Verband Deutscher Elektrotechniker

Montaje
Utilice los orificios de montaje 25.
El bulbo debe sujetarse en la pared por medio de un soporte purta-bulbo 26.
Si se desea montar el bulbo en un deposito de agua 0 de salmuera, esta operación puede realizarse utilizando una caja prensa-estopa para tubo capilar 31 o un protector de bulbo 30.
Los elementos 31 y 30 pueden ser obtenidos como accesorias. Véase «Accesorios».

Conexión a la red de alimentación
Véase fig. 12
START = cierre. STOP = abertura. DIFF = diferencial.
Diámetro de cable: 6-14 mm.
El terminal de tierra 38 ha de ser conectado a tierra.

Accesorios
Caja prensa-estopa para tubo capilar 1/2 pulg. BSP (ref. 31) 017-4220
Conjunto de protector de bulbo para bulbo de hasta 110 mm de largo (ref. 30) 993N3568
Conjunto de protector de bulbo para bulbos de hasta 180 mm de largo (ref. 30) 993N3569
Conjunto de accesorios con dos grapas para bulbo 993N3500
Conjunto de accesorios con soporte porta-bulbo para montaje en la pared, 4 abrazaderas para tubo capilar y 9 clavos de 12 mm (ref. 26) 017-4157
Entrada de cable roscada de topo especial, Pg 13.5 ext. × 5/8 pulg. – 18 UNF int. (fig. 13) 614X3009

Reglaje. Véanse figuras 1, 2 y 12
Ajustar el termostato a la temperatura de accionamiento mínima (ajuste de gama). El reglaje se hace girando el botón 5 y observando al mismo tiempo la escala principal 9. La diferencial se regula ha ciendo girar la tuerca de ajuste de diferencial 19 de acuerdo con las indicaciones del nomograma en cuestión.
La temperatura de accionamiento máxima es la suma del ajuste de temperatura y de la diferencial.
Ejemplo: Termostato RT 2
Ajuste de gama (temperatura de accionamiento minima) = +10°C.
Regulación de la diferencial par medio de la tuerca de ajuste de diferencial en la marca = 5.
Diferencial real = 12°C.
Temperatura de accionamiento máx. = 10 + 12 = 22°C.

Conexión a los bornes 1-4:
El interruptor **abre** el circuito cuando la temperatura ha disminuído hasta +10°C, y lo cierra cuando la temperatura ha subido de nuevo hasta 22°C.

Conexión a los bornes 1-2:
El interruptor **cierra** el circuito cuando la temperatura ha disminuido hasta +10°C y lo abre cuando la tempe-ratura ha subido de nuevo hasta +22°C.

En general, haciendo girar el botón, las temperaturas máxima y mínima de accionamiento (abertura y cierre) se desplazan ambas automáticamente hacia arriba o hacia abajo debido a la diferencial fija. Por otra parte haciendo girar la tuerca de reglaje de diferencial, solamente cambia la temperatura de accionamiento máxima.

INSTRUCTIONS

RT 8L, 14L, 16L, 101L, 140L

017R9501

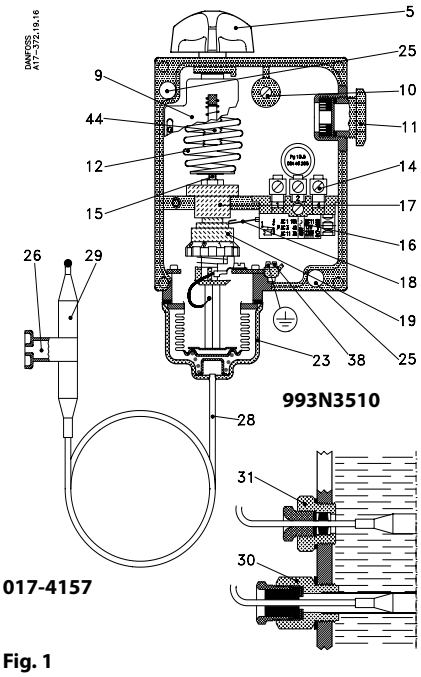

Fig. 1

RT8L, 14L, 10L

993N3568

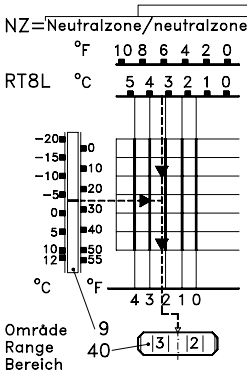

Fig. 4

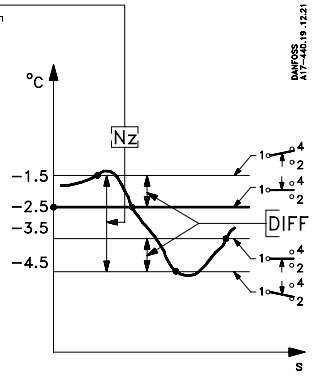

Fig. 5

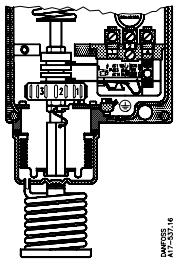

Fig. 2

RT 16L

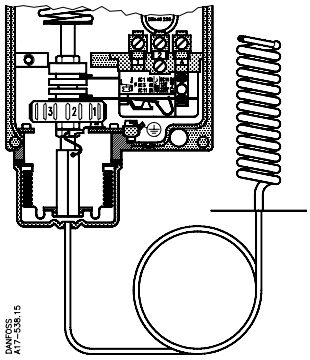

Fig. 3

RT 140L

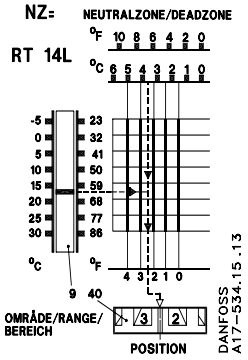

Fig. 6

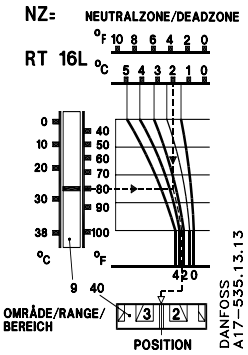

Fig. 7

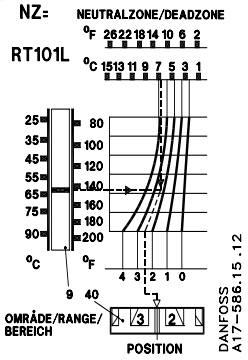

Fig. 8

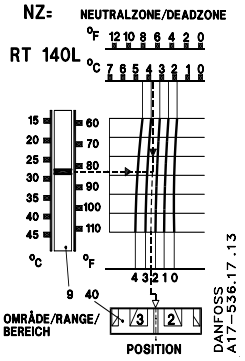

Fig. 9

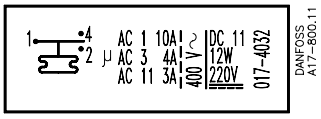

Fig. 10

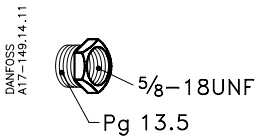

Fig. 11 – 614X3009

© Danfoss A/S

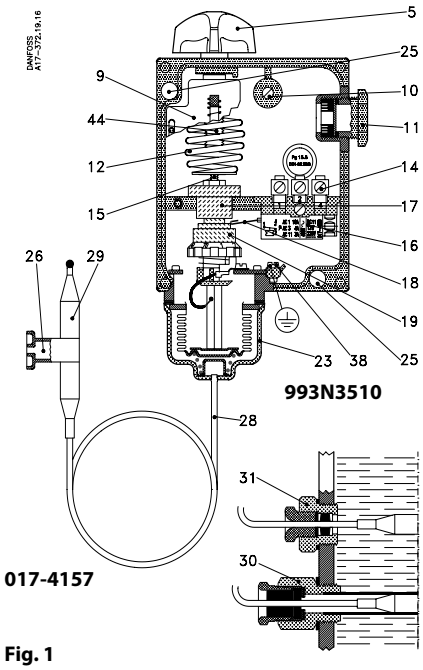

Fig. 1

RT8L, 14L, 10L **993N3568**

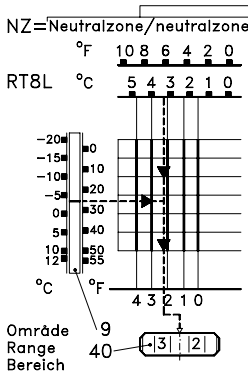

Fig. 4

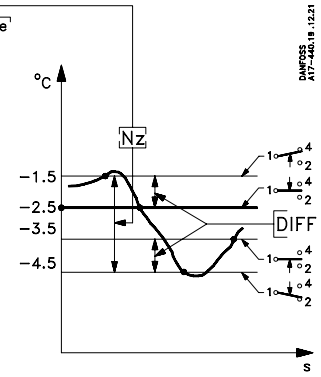

Fig. 5

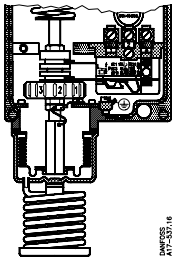

Fig. 2

RT 16L

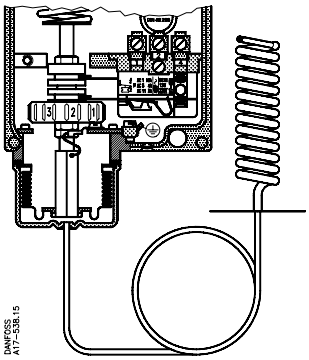

Fig. 3

RT 140L

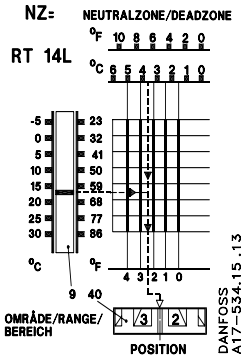

Fig. 6

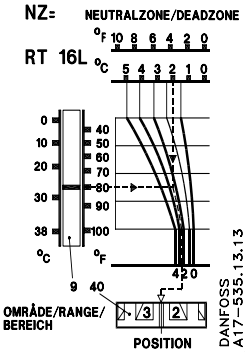

Fig. 7

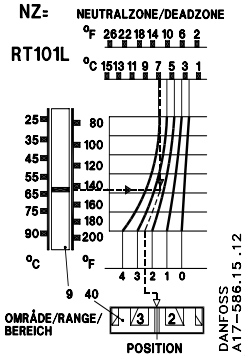

Fig. 8

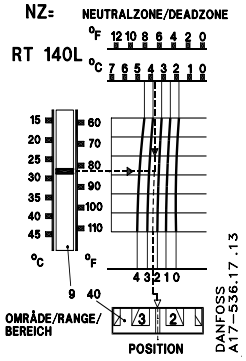

Fig. 9

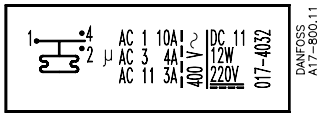

Fig. 10

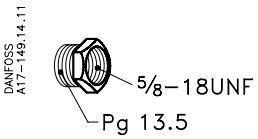

Fig. 11 – 614X3009

DANSK

Termostater
med neutralzone

Tekniske data
Fast differens (DIFF)
RT 8L og 16L: 1.5K
RT 14L: 1.5K/0.7K i min./maks. område
RT101L: 2.5K/3.5K i min./maks. område
RT 140L: 1.8K/2K i min./maks. område

Maks. omgivelsestemperatur
RT 8L,14L, 101L,140L: –50 → 70°C (–50 T70)
RT 16L: 50°C

Maks. følertemperatur
RT 8L: 145°C
RT 14L: 150°C
RT 16L: 100°C
RT 101L: 300°C
RT 140L: 240°C

Min. temperaturændringshastighed
< 1K/15 minutter.

Tæthedsgrad
IP 66 iht. IEC 144.

Kontaktbelastning
Se kontaktdækslet eller fig. 10.
Mærkningen, f.eks. 10 (4) A, 400 V ~ a.c. angiver, at der maks. må tilsluttes 10 A ohmsk og i A induktiv belastning ved 400 V~.
Den maksimale startstrøm ved indkobling af motor (L.R.) må være op til syv gange den induktive belastning.
RT opfylder betingelserne i VDE*0660, Prüfklasse II.
*VDE = Verband Deutscher Elektrotechniker

Montering
Benyt monteringshullerne pos. 25.
Termostaten monteres bedst med håndknappen 5 opad.
Termostathuset og kapillarrøret kan anbringes koldere eller varmere end føleren.
For RT 8L og 14L kan den cylindriske føler fastgøres til væg ved hjælp af en følerholder 26 eller monteres i brinetank ved hjælp af et dykrør 30 eller en kapillar-rørspakdåse 31. Se fig. 1.
Skal kapillarrøret føres gennem en væg, gøres dette lettest via et indmuret rør, der lukkes med gummipropper.

El-tilslutning
Kabeltilslutning Pg 13.5.
Kabeldiameter 6-14 mm.
Ved stiv kabelbeskyttelse anvendes kabelforskruningen vist på fig. 11.
Jordforbindelsen tilsluttes jordskruen 38.

Indstilling
Den ønskede temperatur (= brydetemperaturen for kontakterne 2-3) indstilles ved hjælp af håndknappen 5. Indstillingen aflæses på områdeskalaen 9. Den ønskede neutralzone (Nz) opsøges i diagrammet.
På diagrammets nederste skala aflæses den position, neutralzonerullen 40 skal indstilles på.

Eksempel: RT 8L
Ønsket temperatur: –2.5°C.
Ønsket neutralzone (Nz): 3°C.
Med håndknappen 5 indstilles termostaten på –2.5°C.
Som det ses af diagrammet, opnås den ønskede neutralzone på 3°C ved at indstille neutralzonerullen 40 på positionen 2.4.
Slutte- og brydetemperaturerne for kontaktsystemet (se fig. 5) bliver herved, idet den faste differens =1°C.
Sluttetemperatur for kontakterne 1-4 = –2.5°C +1°C = –1.5°C.
Brydetemperatur for kontakterne 1-4 = indstillet temperatur: –2.5°C.
Sluttetemperatur for kontakterne 1-2 = –1.5°C – 3°C = –4.5°C.
Brydetemperatur for kontakterne 1-2 = –4.5°C + 1 °C = –3.5°C.

ENGLISH

Thermostats
with dead zone

Technical data
Fixed differential (DIFF)
RT 8L and 16L: 1.5K (2.7°F)
RT 14L: 1.5K (2.7°F) / 0.7K (1.3°F) min./max. range
RT 101L: 2.5K (4.8°F) / 3.5K (6.7°F) min./max. range
RT 140L: 1.8K (3.2°F) / 2K (3.8°F) min./max. range

Maximum ambient temperature
RT 8L,14L, 101L,140L: –50 (–58°F) → 70°C (160°F) (–50 T70)
RT 16L: 50°C (120°F)

Maximum bulb temperature
RT 8L: 145°C (290°F)
RT 14L: 150°C (300°F)
RT 16L: 100°C (210°F)
RT 101L: 300°C (570°F)
RT 140L: 240°C (465°F)

Min. temperature variation rate
< 1K/15 minutes.

Enclosure
IP 66 to IEC144.

Rating
See switch cover or fig. 10.
The marking, e.g. 10 (4) A, 400 V ~ a.c. means that max. connection current is 10 A ohmic and 4 A inductive at 400 V ~.
The max. starting current on motor cutin (L.R.) may be up to seven times the inductive load.
RT complies with conditions specified in VDE*0660, Prüfklasse II.
*VDE = Verband Deutscher Elektrotechniker

Fitting
Use the mounting holes item 25.
The thermostat is fitted best with the knob 5 facing upwards.
The thermostat housing and the capillary tube can be placed colder or warmer than the bulb.
In the case of RT 8L and 14L, the cylindrical bulb can be fixed to a wall by using a bulb holder 26 or it can be fitted in a brine tank by means of a bulb pocket 30 or in capillary tube gland 31. See fig. 1.
If the capillary tube is to be passed through a wall, it can be done most easily by using a grouted-in pipe closed by rubber plugs.

Mains connection
Cable connection Pg 13.5.
Cable diameter 6-14 mm.
The screwed cable entry shown in fig. 11 is used with rigid cable conduit. Earth connection to earth terminal 38.

Setting
The required temperature (= break temperature of contacts 2-3) is set by rotating the knob 5. The setting can be read on the main scale 9.
The required dead zone (Nz) is found in the diagram. On the lower scale of the diagram, the value at which the dead zone setting disc 40 is to be set, can be read.

Example: RT 8L
Required temperature: –2.5°C (27.5°F).
Required dead zone (Nz): 3°C (5.5°F).
The thermostat is set for –2.5°C (27.5°F) by rotating the knob 5.
As it can be seen from the diagram, the required dead zone of 3°C (5.5°F) is obtained by setting the setting disc 40 at 2.4.
The make and break temperatures of the switch (see fig. 5) are then – with the differential fixed at 1°C (1.8°F):
Make temperature of contacts 1–4 = –2.5°C + 1°C = –1.5°C (27.5°F + 1.8°F = 29.3°F).
Break temperature of contacts 1-4 = temperature setting: –2.5°C (27.5°F).
Make temperature of contacts 1-2 = –1.5°C – 3°C = –4.5°C (29.3°F – 5.5°F = 23.8°F).
Break temperature of contacts 1-2 = –4.5°C + 1°C = –3.5°C (23.8°F + 1.8°F = 25.6°F).

DEUTSCH

Thermostate
mit Neutralzone

Technische Daten
Feste Differenz (DIFF)
RT 8L und 16L: 1.5K
RT 14L: 1.5K/0.7K min./max. Bereich
RT 101L: 2.5K/3.5K min./max. Bereich
RT 140L: 1.8K/2K min./max. Bereich

Max. Umgebungstemperatur
RT 8L,14L, 101L,140L: –50 → 70°C (–50 T70)
RT 16L: 50°C

Max. Fühlertemperatur
RT 8L: 145°C
RT 14L: 150°C
RT 16L: 100°C
RT 101L: 300°C
RT 140L: 240°C

Min. Temperaturänderungsgeschwindigkeit
< 1K/15 minutter.

Schutzart
IP 66 nach IEC144.

Kontaktbelastung
Siehe Kontaktdeckel oder Fig.10.
Die Kennzeichnung, z.B.10 (A) A,400 V ~ a.c., gibt an, daß bei 400 V ~ maximal eine Belastung von 10 A ohmsch und 4 A induktiv angeschlossen werden darf.
Der maximale Einschaltstrom beim Einschalten eines Motors (L.R.) darf bis zum siebenfachen der induktiven Belastung betragen.
RT genügt den Bedingungen für Prüfklasse II nach VDE 0660.

Montage
Befestigungslöcher Pos. 25 benutzen.
Der Thermostat ist am zweckmässigsten mit nach oben gerichtetem Schaltknopf 5 zu montieren.
Bei den Typen RT 8L und 14L kann der zylindrische Fühler mittels eines Fühlerhalters 26 an der Wand oder unter Anwendung eines Tauchrohrs 30 oder einer Kapillarrohrstopfbuchse 31 im Solebehälter montiert werden. Siehe Fig.1.
Die Verlegung des Kapillarrohres durch eine Wand erfolgt am einfachsten mittels eines eingemauerten, mit Gummistopfen abgedichteten Rohres.

Elektrischer Anschluß
Kabelanschluß Pg 13.5.
Kabeldurchmesser 6-14 mm.
Bei einem starren Kabelschutz ist eine Kabelver-schraubung entspr. Fig. 11 zu verwenden. Die Erdung erfolgt an der Erdungsschraube 38.

Einstellung
Die gewünschte Temperatur (= Ausschalttemperatur der Kontakte 2-3) wird mittels des Schaltknopfes 5 eingestellt und auf der Bereichskala 9 abgelesen. Darauf wird die gewünschte Neutralzone (Nz) in den Dia-grammen aufgesucht. Auf der unteren Skala des Diagramms wird die Einstellposition der Neutralzonen-rolle 40 abgelesen.

Beispiel: RT 8L
Gewünschte Temperature: –2.5°C:
Gewünschte Neutralzone (Nz): 3°C.
Mittels Schaltknopf 5 Thermostat auf –2.5°C einstellen.
Aus dem Diagramm ist ersichtlich, daß sich die gewünschte Neutralzone von 3°C bei einer Einstellung der Neutralzonenrolle 40 auf die Position 2.4 ergibt. Es ergeben sich hernach für das Kontaktsystem (siehe Fig. 5) bei der fest eingestellten Differenz = 1°C folgende Ein- und Ausschalttemperaturen:
Einschalttemperatur der Kontakte 1-4 = –2.5°C +1°C = –1.5°C.
Ausschalttemperatur der Kontakte 1-4 = eingestellte Temperatur: –2.5°C.
Einschalttemperatur der Kontakte 1-2 = –1.5°C – 3°C = –4.5°C.
Ausschalttemperatur der Kontakte 1-2 = –4.5°C + 1°C = –3.5°C.

INSTRUCTIONS

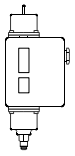

RT 122

017R9515

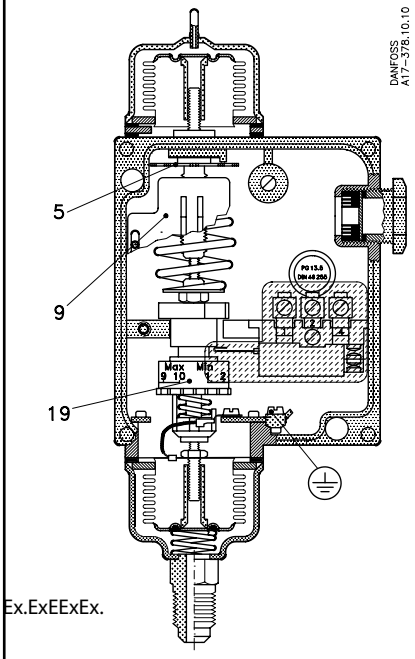

Fig. 1

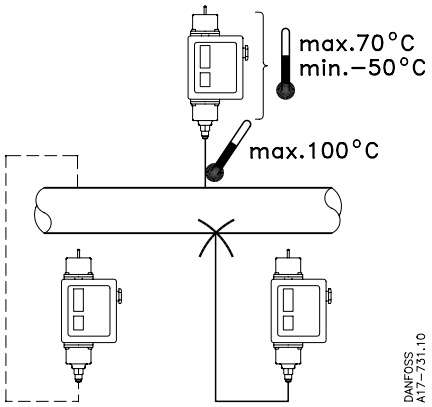

Fig. 2

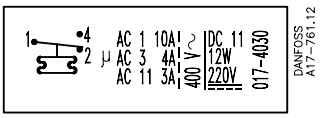

Fig. 3

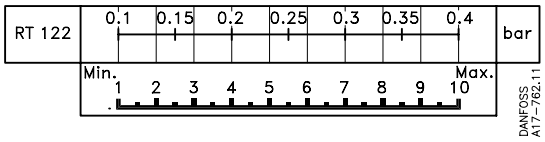

Fig. 4

Technical data:

Pressure control with barometric pressure reading type RT 122.

Regulating range:
p_e = −1 to −0.2 bar
p = 0 to 0.8 bar

Max. working pressure: 85 psi (6 bar)
Ambient temperature: −50°C to 70°C
Pressure connection: max. 100°C.

Installation:
The pressure control is mounted as shown in fig. 2. The pressure connection can be made by the aid of a capillary tube.

Contact load:

The contacts 1-4 close at rising pressure.
The contacts 1-2 close at falling pressure.
See fig. 3.

Setting:

Adjust the lowest operating pressure with the setting disc (5) and read at the same time the main scale (9), see fig. 1.
Adjust the difference with the setting nut (19)according to the nomogram in fig. 4.
Highest operating pressure = Lowest operating pressure + differential.

Example:

A compressor has to start at P_{abs} = 0.6 bar and stop at P_{abs} = 0.4 bar.

1. Connect the compressor with the terminals 1-4 of the pressure control.
2. Set the lowest operating pressure 0.4 bar with the setting disc (5).
3. Adjust the setting nut (19) to 4 (corresponding to a difference of 0.2 bar).

The number 4 is to be read from the nomogram in fig. 4.

© Danfoss A/S (AC-RCMP,jp)

INSTRUCTIONS

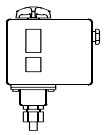

RT 1, 1A, 5, 5A

017R9507

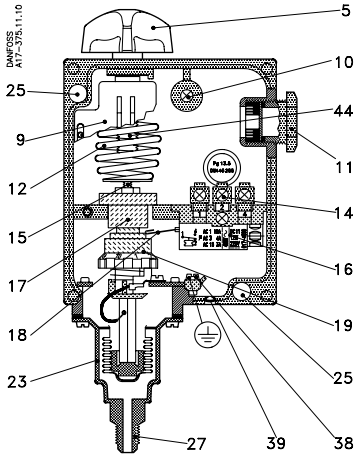

Fig. 1. RT 1

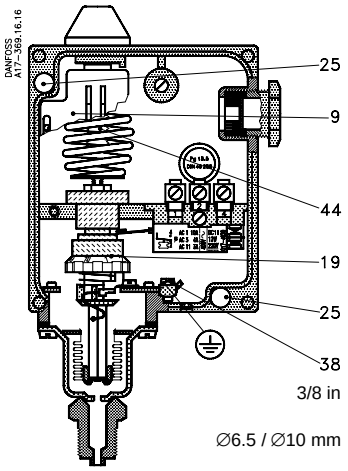

Fig. 2. RT 5A

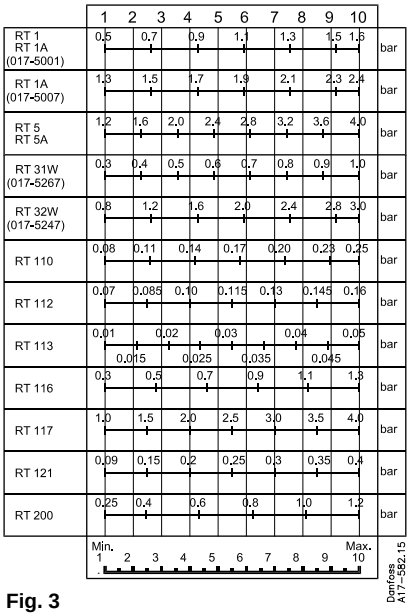

Fig. 3

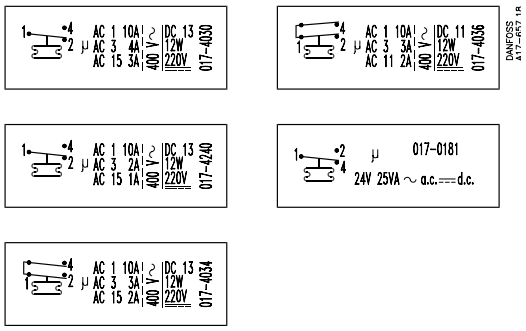

Fig. 4

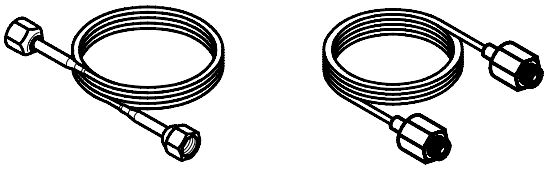

RT 1, 5:
1 m, 1/4 in × 1/4 in flare
060-0071

RT 1A, 5A:
1 m, 3/8 in × M10-0.75
060-0082

Fig. 6

RT 1, RT 1A
(LP)

RT 5, RT 5A
(HP)

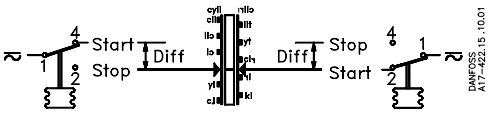

Fig. 5

Pg 13.5 × 5/8 in -18 UNF
614X3009

Fig. 7

3/8 in × 1/4 in flare
017-4205

Fig. 8

DANSK

Pressostater

Tekniske data

Type	Best.nr.	Reset	Regulerings-område bar (p_e)	Indstillelig mekanisk differens bar(Δp)
RT 1	**017-5245**	–	–0.8 → +5	0.5 til 1.6
	017-5246	min.		fast ca. 0.5
RT 1A	**017-5001**	–		0.5 til 1.6
	017-5002	min.		fast ca. 0.5
	017-5007	–		1.3 til 2.4
RT 5	**017-5250**	–	4 → 17	1.2 til 4
	017-5251	maks.		fast ca. 1.2
RT 5A	**017-5046**	–		1.2 til 4
	017-5047	maks.		fast ca. 1.2

Kølemidler
RT 1 og 5: alle fluorerede
RT 1A og 5A: R 717 (NH_3) samt alle fluorerede

Tilladeligt driftstryk, PB: 22 bar

Maks. prøvetryk, p': 25 bar

Maks. till. temp. i bælg: 70°C

Tæthedsgrad: IP 66 iht. IEC 529

Kontaktbelastning:
Se kontaktdækslet eller fig. 4.
Mærkningen, f.eks.10(4) A, 400 V ~, angiver, at der maks. må tilsluttes 10 A ohmsk eller 4 A induktiv belastning ved 400 V ~. Den maksimale startstrøm ved indkobling af motor (L.R.) må være op til syv gange den induktive belastning – dog maks. 28 A. RT pressostaterne opfylder betingelserne i VDE* 0660.

*VDE = Verband Deutscher Elektrotechniker

Montering
Pressostaten monteres på ventiltavlen eller på selve kompressoren.
Benyt monteringshullerne 25.
Hvis apparatet kan blive udsat for vibrationer, bør det monteres på et blødt underlag.

Forekommer der trykpulsationer i anlægget, skal disse dæmpes effektivt, f.eks. ved at tilslutte pressostaten til anlægget ved hjælp af et kapillarrør. Se fig. 6.

El-tilslutning Se fig. 5
START = slutte
STOP = bryde
DIFF = differens
Kabeldiameter: 6 → 14 mm
Jordforbindelse tilsluttes jordskruen 38.
Beskyttelsesdækslet monteres.

© Danfoss A/S

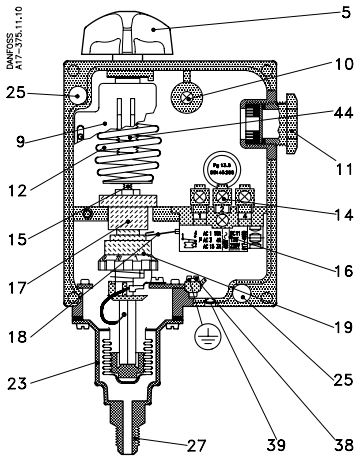

Fig. 1. RT 1

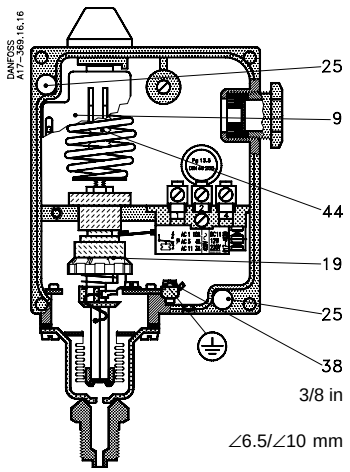

Fig. 2. RT 5A

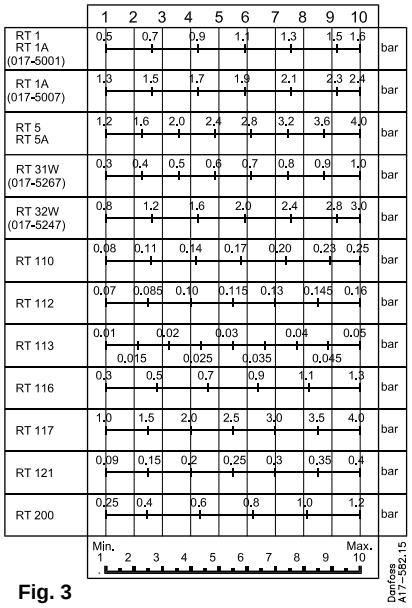

Fig. 3

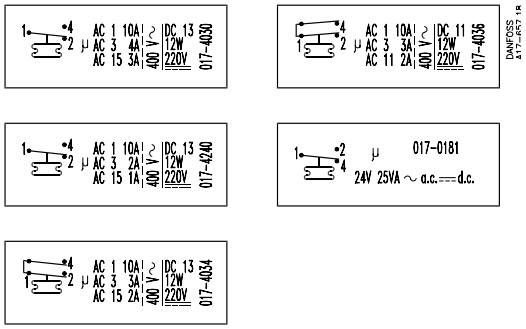

Fig. 4

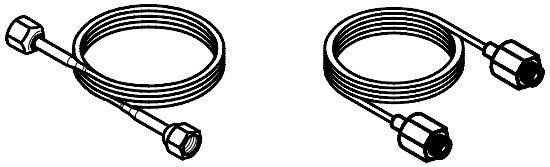

RT 1, 5:
1 m, 1/4 in × 1/4 in flare
060-0071

RT 1A, 5A:
1 m, 3/8 in × M10-0.75
060-0082

Fig. 6

RT 1, RT 1A
(LP)

RT 5, RT 5A
(HP)

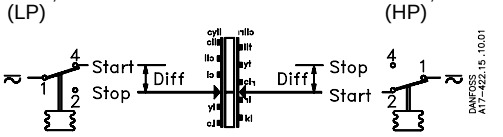

Fig. 5

Pg 13.5 × 5/8 in -18 UNF
614X3009

Fig. 7

3/8 in × 1/4 in flare
017-4205

Fig. 8

Indstilling Se fig. 2, 3 og 5
Pressostaten indstilles på laveste aktiveringstryk (områdeindstilling).

NB: RT 5 og 5A med maks. reset (best.nr. 017-5251 og 017-5047) indstilles på højeste aktiveringstryk (områdeindstilling).
Indstillingen udføres med områdespindelen 44 under samtidig aflæsning af hovedskalaen 9.
Differensen indstilles med differensrullen 19 efter diagrammet fig. 3.
Højeste aktiveringstryk er lig summen af indstillingstryk og differens.

Eksempel

En indstilling på »5« fig. 3 vil på type RT 1A (best.nr. 017-5007) give en differens på ca. 1.8 bar, medens samme indstilling på type RT 5A vil give en differens på ca. 2.3 bar.

Generelt gælder, at en drejning af områdespindelen automatisk flytter både højeste og laveste aktiveringstryk (bryde og slutte) op eller ned på grund af den uændrede differens. En drejning på differensrullen vil derimod kun ændre det højeste aktiveringstryk.

Alle RT-typer *uden reset* samt RT-typer med *min. reset* har skalaen kalibreret således at den på skalaen indstillede værdi svarer til kontaktskifte ved *laveste aktiveringstryk* (normal indstilling).
I RT-apparater med *min. reset* skal trykket i bælgsystemet stige med en værdi svarende til differensen, før manual reset kan ske.
RT-apparater med *maks.* reset har skalaen kalibreret således, at den på skalaen indstillede værdi svarer til kontaktskifte ved *højeste aktiveringstryk* (NB: modsat normal indstilling).
Trykket i bælgsystemet skal *falde* med en værdi svarende til differensen, før manual reset kan ske.

Tilbehør Se fig. 6, 7 og 8.

ENGLISH

Pressure controls

Technical data

Type	Code no.	Reset	Range bar (p_e)	Adjustable mechanical differential bar(Δp)
RT 1	**017-5245**	–	–0.8 → +5	0.5 to 1.6
	017-5246	min.		fixed approx. 0.5
RT 1A	**017-5001**	–		0.5 to 1.6
	017-5002	min.		fixed approx. 0.5
	017-5007	–		1.3 to 2.4
RT 5	**017-5250**	–	4 → 17	1.2 to 4
	017-5251	max.		fixed approx 1.2
RT 5A	**017-5046**	–		1.2 to 4
	017-5047	max.		fixed approx.1.2

Refrigerants
RT 1 and 5: All fluorinated refrigerants
RT 1A and 5A: R 717 (NH_3) and all fluorinated refrigerants

Max. working pressure, PB/MWP:
22 bar/315 psig

Max. test pressure, p': 25 bar

Maximum permissible bellows temperature:
70°C

Enclosure: IP 66 according to IEC 529

Contact load: See switch cover or fig. 4.
The marking, e.g.10(4) A, 400 V ~ means that max. connection current is 10 A ohmic or 4 A inductive at 400 V ~.
The max. starting current on motor cutin (L.R.) may be up to seven times the inductive load – but max. 28 A.
The RT pressure controls comply with conditions specified in VDE* 0660.
* VDE = Verband Deutscher Elektrotechniker.

Fitting
The pressure control is designed for fitting on the valve panel or the compressor. Use the mounting holes 25. If the control is subjected to vibration, it should be mounted on a soft intermediate base.

If pressure pulsations occur in the system, such pulsations should be effectively damped, e.g. by connecting the pressure control to the system through a capillary tube.
See fig. 6.

Mains connection See fig. 5
START= make
STOP = break
DIFF = differential.
Cable diameter: 6 ~ 14 mm
The earth terminal 38 should be connected to earth.
Refit protective cap.

Adjustment See figs. 2, 3 and 5
Set the pressure control for minimum actuating pressure (range setting).

NOTE: RT 5 and 5A with max. reset (code nos. 017-5251 and 017-5047) should be set for maximum actuating pressure (range setting).
Setting is done by rotating the main spindle 44, at the same time reading the main scale 9. The differential is set by rotating the differential adjusting nut 19 according to the diagram in fig. 3.
Maximum actuating pressure is the sum of the setting pressure and the differential.

Example
A setting on "5" fig. 3 will give a differential of approx. 1.8 bar on type RT 1A (code no. 017-5007), while the same setting on type RT 5A will give a differential of approx. 2.3 bar.

In general, turning the main spindle automatically moves both the maximum and minimum actuating pressures (break and make pressures) up or down because of the fixed differential.
On the other hand turning the differential adjusting nut only alters the maximum actuating pressures.

The scale of all RT types *without reset* and RT types with *min. reset* is calibrated in such a way that the scale setting corresponds to contact change-over at *minimum actuating pressure* (normal setting).
In RT controls with *min. reset*, the pressure in the bellow system must *increase* by a value corresponding to the differential, before manual reset can be effected.
RT controls with *max. reset* have a scale which is calibrated in such a way that the scale setting corresponds to contact changeover at *maximum actuating pressure*. (NOTE: contrary to normal setting). The pressure in the bellows system must *decrease* by a value which corresponds to the differential, before manual reset can be effected.

Accessories **See figs. 6,7 and 8.**

DEUTSCH

Pressostate

Technische Daten

Typ	Bestell-Nr.	Reset	Regel-bereich bar (p_e)	Einstellbare mechanische Differenz bar(Δp)
RT 1	**017-5245**	–	–0. 8 → +5	0.5 bis 1.6
	017-5246	min.		fest ca. 0.5
RT 1A	**017-5001**	–		0.5 bis 1.6
	017-5002	min.		fest ca. 0.5
	017-5007	–		1.3 bis 2.4
RT 5	**017-5250**	–	4 → 17	1.2 bis 4
	017-5251	max.		fest ca. 1.2
RT 5A	**017-5046**	–		1.2 bis 4
	017-5047	max.		fest ca. 1.2

Kältemittel
RT 1 und 5: alle fluorierten Kältemittel
RT 1A und 5A: R 717 (NH_3) sowie alle fluorierten Kältemittel

Zul. Betriebsüberdruck, PB: 22 bar
Max. Prüfdruck, p': 25 bar
Max. zul. Temp. im Wellrohr: 70°C
Schutzart: IP 66 nach IEC 529

Schaltleistung: Siehe Kontaktdeckel oder Fig.4. Die Kennzeichnung, z.B.10(4) A, 400 V ~, gibt an, daß bei 400 V ~ maximal eine Belastung von 10 A ohmsch oder 44 A induktiv angeschlossen werden darf.
Der maximale Einschaltstrom beim Einschalten eines Motors (L.R.) darf bis zum siebenfachen der induktiven Belastung betragen – jedoch max. 28 A. Die RT Pressostate genügen den Bedingungen nach VDE 0660.

Montage
Der Pressostat kann an der Ventiltafel oder am Kompressor selbst montiert werden.
Montagelöcher 25 benutzen.
Falls das Gerät Vibrationen ausgesetzt ist sollte es auf einer weichen Unterlage montiert werden.

Kommen Druckpulsationen in der Anlage vor, müssen diese wirksam gedämpft werden, z.B. durch Anschluß des Pressostats an die Anlage über ein Kapillarrohr, siehe Fig.6.

Elektrischer Anschluß Siehe Fig.5
START= Einschalten
STOP = Ausschalten
DIFF = Differenz
Kabeldurchmesser: 6 → 14 mm
Die Erdleitung ist an die Erdungsschraube 38 anzuschliessen.
Schutzkappe wieder montieren.

Einstellung Siehe Fig. 2, 3 und 5
Der *Pressostat ist auf den unteren Ansprechdruck einzustellen* (Bereichseinstellung).
Anm.: RT 5 und RT 5A mit max. Reset (Bestell-Nr. 017-5251 und 017-5047) sind auf den oberen Ansprechdruck einzustellen (Bereichseinstellung).
Die Einstellung wird mit der Bereichsspindel 44 unter gleichzeitigem Ablesen der Hauptskala 9 vorgenommen.
Die Differenz wird nach dem Diagramm in Fig. 3 mit der Differenzrolle 19 eingestellt. Der obere Ansprechdruck ist gleich der Summe von Einstelldruck und Differenz.

Beispiel
Eine Einstellung auf »5« Fig. 3 wird beim Typ RT 1A (Bestell-Nr. 017-5007) eine Differenz von etwa 1.8 bar, ergeben, während die gleiche Einstellung beim Typ RT 5A eine Differenz von etwa 2.3 bar ergeben wird.

Allgemein gilt, daß eine Verstellung an der Bereichsspindel automatisch sowohl den oberen als auch den unteren Ansprechdruck (Ausschalten und Einschalten) nach oben oder unten versetzen wird, weil die Differenz unverändert ist. Eine Verstellung an der Differenzrolle wird dagegen nur den oberen Ansprechdruck ändern.
Bei allen RT-Typen *ohne Reset* sowie bei den RT- Typen mit *min. Reset* ist die Skala so kalibriert, daß der an der Skala eingestellte Wert einem Kontaktwechsel beim *unteren Ansprechdruck* entspricht (die normale Einstellung).
Bei RT-Geräten mit *min. Reset* muss der Druck im Wellrohrsystem um einen der Differenz entsprechenden Wert *ansteigen,* bevor eine Rückstellung von Hand vorgenommen werden kann.
Bei RT-Geräten mit *max.* Reset ist die Skala so kalibriert, daß der an der Skala eingestellte Wert einem Kontaktwechsel beim *oberen Ansprechdruck* entspricht (also im Gegensatz zur normalen Einstellung).
Der Druck im Wellrohrsystem muß um einen der Differenz entsprechenden Wert *abfallen* bevor eine Rückstellung von Hand vorgenommen werden kann.

Zubehör Siehe Fig. 6,7 und 8.

FRANÇAIS

Pressostats

Caractéristiques techniques

Type	N° de code	Ré-arme-ment	Plage de réglage bar (p_e)	Différentiel mécanique réglable bar(Δp)
RT 1	**017-5245**	–	–0.8 → +5	0.5 à 1.6
	017-5246	min.		fixe env. 0.5
RT 1A	**017-5001**	–		0.5 à 1.6
	017-5002	min.		fixe env. 0.5
	017-5007	–		1.3 à 2.4
RT 5	**017-5250**	–	4 → 17	1.2 à 4
	017-5251	max.		fixe env. 1.2
RT 5A	**017-5046**	–		1.2 à 4
	017-5047	max.		fixe env. 1.2

Réfrigérants
RT 1 et 5: tous liquides fluorés
RT 1A et 5A: R 717 (NH_3) et tous liquides fluorés

Pression de service max., PB: 22 bar
Pression d'aissai max., p': 25 bar
Pression max. admis. dans le soufflet: 70°C
Capsulage: IP 66 selon IEC 529

Charge des contacts: Voir le couvercle de contact ou la fig. 4. Le marquage de, par exemple, 10(4) A, 400 V ~ indique qu'au maximum, il est admis de raccorder une charge ohmique de 10 A ou charge inductive de 4 A sous 400 V ~.
Le courant de démarrage maximal à l'enclenchement du moteur (L.R.) est admis à sept fois la charge inductive – avec un maximum de 28 A.
Les pressostats RT sont conformes aux normes VDE 0660.
*VDE = Verband Deutscher Elektrotechniker
(Association des Ingénieurs Électriciens Allemands)

Montage
Monter le pressostat sur le tableau général ou sur le compresseur proprement dit.
Utiliser les trous de montage repére 25.
Si l'appareil risque d'être soumis à des vibrations, il doit être fixé sur un support souple.
En cas de pulsations au niveau de la prise de pression il faut les amortir d'une façon efficace, p. ex. en raccordant le pressostat à l'installation au moyen d'un capillaire. Voir fig. 6.

Raccordement électrique Voir fig. 5
START = enclencher
STOP = déclencher
DIFF = différentiel
Diamètre du câble: 6 → 14 mm
Raccorder la terre à la vis 38
Remonter la capuchon protecteur.

Réglage Voir fig. 2, 3 et 5
Régler le pressostat sur la pression d'actionnement la plus basse (réglage de la plage).

NB: régler le RT 5 et 5A à réarmement max. (no de code: 017-5251 et 017-5047) sur la préssion d'actionnement la plus élevée (réglage de la plage).
Faire le réglage à l'aide de la tige de plage 44, en lisant simultanément l'échelle principale 9.
Régler le différentiel au moyen du rouleau 19 d'après le diagramme fig. 3.
La pression d'actionnement la plus élevée est égale à la somme de la pression de réglage et du différentiel.

Exemple
Le réglage sur »5« fig. 3 donnera, pour type RT 1A (no de code 017-5007) un différentiel d'env. 1.8 bar, tandis qu'il donnera, pour le type RT 5A, un différentiel d'env. 2.3 bar.

En général, en tournant la tige de la plage, on déplace automatiquement vers le haut ou vers le bas tant la pression d'actionnement la plus élevée que celle la plus basse (de coupure et de fermeture) car la valeur de différentiel reste inchangée.
La modification du différentiel ne fait varier par contre, que la pression d'actionnement là plus élevée.

Pour tous les types RT sans *réarmement* ainsi que pour les types RT à *réarmement min.*, l'échelle est étalonnée de sorte que sa valeur de réglage corresponde à une inversion du contact pour *la pression d'actionnement la plus basse* (réglage normal).
Pour les appareils RT à *réarmement min.,* la pression dans le système de soufflet doit *augmenter* d'une valeur correspondant au différentiel, avant que le réarmement manuel ne puisse avoir lieu.
En ce qui concerne les appareils RT à *réarmement max.* l'échelle est étalonnée de sorte que sa valeur de réglage corresponde à une inversion du contact pour la *pression d'actionnement la plus élevée* (NB: contraire au réglage normal).
La pression dans le système de soufflet doit baisser d'une valeur correspondant au différentiel, avant que le réarmement manuel ne puisse avoir lieu.

Accessoires Voir fig. 6, 7 et 8.

ESPAÑOL

Presostatos

Características técnicas

Tipo	Número de código	Rearme manual	Campo bar (p_e)	Diferencial mecánica ajustable bar(Δp)
RT 1	**017-5245**	–	–0.8 → +5	0.5 – 1.6
	017-5246	min.		fijado aprox.0.5
RT 1A	**017-5001**	–		0.5 – 1.6
	017-5002	min.		fijado aprox.0.5
	017-5007	–		1.3 – 2.4
RT 5	**017-5250**	–	4 → 17	1.2 – 4
	017-5251	max.		fijado aprox.1.2
RT 5A	**017-5046**	–		1.2 – 4
	017-5047	max.		fijado aprox.1.2

Refrigerantes
RT 1 y 5: Todos Los refrigerantes fluorados
RT 1A y 5A: R 717 (NH_3) y todos los refrigerantes fluorados

Presión de funcionamiento max., PB: 22 bar
Presión de prueba max., p': 25 bar
Temperatura máxima permisible en el fuelle: 70°C
Caja: IP 66 según normas IEC 529

Carga de los contactos: véase tapa del termostato o figura 4.
La inscripción, par ejemplo 10(4) A, 400 V ~ significa que la corriente de conexión máxima es de 10 A con cargo ohmica o de 4 A con cargo inductiva, a 400 V ~.
La corriente de arranque máxima en el momento de la conexión del motor (L.R.) puede ser de haste 7 veces la corriente con cargo inductiva (máx. 28 A).
Los presostatos RT satisface las condiciones estipuladas en VDE* 0660.
*VDE = Verband Deutscher Elektrotechniker.

Montaje
El presostato está destinado a ser montado en el panel de control o en el mismo compresor. Utilice los orificios de montaje 25.
Si el presostato esta expuesto a vibraciones ha de ser montado en una base intermedia blanda.

Si se producen pulsaciones de presión en el sistema, estas pulsaciones han de ser eficazmente amortiguadas, por ejemplo conectando el presostato a la instalación por medio de un tubo capilar. Véase fig. 6.

Conexión a la red de alimentación
Véase fig. 5
START= cierre
STOP = abertura
DIFF = diferencial
Diámetro del cable: 6 → 14 mm
El terminal de tierra 38 ha de ser conectado a tierra.
Volver a colocar caperuza protectora.

Reglaje Véanse figuras 2, 3 y 5
Ajustar el presostato a la presión de accionamiento mínima (ajuste de gama).

NOTA: Los aparatos RT 5 y 5A con reposición máx. (no de código 017-5251 y 017-5047) han de ser ajustados para la presión de accionamiento máxima (ajuste de gama).
Ej ajuste se hace hacienda girar el eje principal 44 observando al mismo tiempo la escala principal 9.
La diferencial se regula haciendo girar la tuerca de ajuste de diferencial 19 de acuerdo con el diagrama de la fig. 3.
La presión de accionamiento máxima es la suma de la presión de ajuste y de la diferencial.

Ejemplo
Un reglaje sobre »5« fig. 3 dará una diferencial de aproximadamente 1.8 bar el aparato tipo RT 1A (no de código 017-5007), mientras que el mismo ajuste en el aparato tipo RT 5A dará una diferencial de aproximadamente 2.3 bar.

En general haciendo girar el eje principal, las presiones de accionamiento máxima y mínima (presiones de abertura de cierre) se desplazan ambas automáticamente hacia arriba o hacia abajo debido a la diferencial fija. Por otra parte, hacienda girar la tuerca de ajuste de diferencial, solamente cambia la presión de accionamiento máxima.

La escala de todos los tipos RT *sin reposición,* y de todos los tipos RT con *reposición min.,* está calibrada de tal manera que el ajuste de escala corresponda al cambio de posición del contacto – cuando se supera la *presión de accionamiento mínima* (ajuste normal).
En Los presostatos RT con *reposición mínima,* la presión en el sistema de fuelle debe *aumentar* en un valor correspondiente a la diferencial, antes de que pueda realizarse la reposición manual.
Los equipos de control RT con *reposición máx.,* tienen una escala calibrada de tal manera que el ajuste de escala corresponda al cambio de posición del contacto cuando se alcanza *la presión de accionamiento máxima,* (NOTA: al revés que en el ajuste normal). La presión en el sistema de fuelle debe *disminuir* en un valor correspondiente a la diferencial, antes de que pueda realizarse la reposición manual.

Accesorios Véanse figuras 6, 7 y 8.

ITALIANO

Pressostati

Dati tecnici

Tipo	N° codice	Rein-ser-zione	Campo bar (p_e)	Differenziale meccanico regolabile bar(Δp)
RT 1	**017-5245**	–	–0.8 → .5	0.5 – 1.6
	017-5246	min.		0.5 fija
RT 1A	**017-5001**	–		0.5 – 1.6
	017-5002	min.		0.5 fija
	017-5007	–		1.3 – 2.4
RT 5	**017-5250**	–	4 → 17	1.2 – 4
	017-5251	max.		1.2 fija
RT 5A	**017-5046**	–		1.2 – 4
	017-5047	max.		1.2 fija

Refrigeranti
RT 1 e 5: Tutti i refrigeranti al fluoro
RT 1A e 5A: R 717 (NH_3) e tutti i refrigeranti al fluoro

Max. pressione di esercizio, PB: 22 bar
Max. pressione di prova, p': 25 bar
Max. temperatura permessa ai soffietti: 70°C
Sistema di chiusura: IP 66 a IEC 529
Carico contatti: indicato sul coperchio dello stesso contatto fig. 4.

*Esempio di marcatura:*10(4) A, 400 V~ significa che alla tensione di 400 V ~ il contatto puo' sopportare un massimo di 10 A omico o 4 A induttivi.
La corrente di spunto (L.R.) puo' essere calcolata per un massimo di sette volte il carico induttivo (max. 28 A).
Il pressostato RT é omologato secondo norme VDE* 0660.
*VDE = Verband Deutscher Elektrotechniker

Montaggio
Il pressostato è adatto per essere montato sul pannello delle apparecchiature o direttamente sul compressore stesso. Usare i fori di fissaggio 25.
Se l'automatismo può essere sottoposto a vibrazioni, dovrà essere montato su una basetta ammortizzata.

Se si verificano pulsazioni di pressione nel sistema, tale pulsazioni dovranno essere eliminate, collegando, per esempio, il pressostato al sistema per mezzo di un tubo capillare. Vedere fig. 5.

Collegamenti principali Vedere fig. 5
START = attacco
STOP = stacco
DIFF = differenziale
Diametro del cavo: 6 → 14 mm
Il terminale terra 38 dovrà essere collegato alla massa.
Rimontare il cappuccio di protezióne.

Regolazione Vedere fig. 2, 3 e 5
Tarate il pressostato per la minima pressione di funzionamento (taratura del campo).

NOTA: RT 5 e 5A con reinserzione di massima (n° codice 017-5251 e 017-5047) dovrebbero essere tarati per una massima pressione di funzionamento (taratura del campo).
La taratura è fatta girando l'asta principale 44, leggendo contemporaneamente la scala principale 9.
Il differenziale è tarato girando il dado 19 di regolazione del differenziale, secondo il diagramma della fig. 3.
La massima pressione di funzionamento è la somma della pressione di taratura e del differenziale.

Esempio
Una taratura di «5» fig. 3 darà un differenziale di circa 1.8 bar sul tipo RT 1A (n° codice 017-5007), mentre la stessa taratura sul tipo RT 5A darà un differenziale di circa 2.3 bar.

In generale, girando l'asta principale automaticamente muove sia la pressione massima e minima di funzionamento (interrompe e attacca) per pressioni piú alte o piú basse per via del differenziale fisso.
D'altra parte, girando il dado di regolazione del differenziale si altera solo la pressione massima di funzionamento.

La scala di tutti i tipi RT *senza reinserzione* e dei tipi RT con *reinserzione di minima* è calibrata in modo tale che la taratura della scala corrisponde all'intervento del contatto relativo *alla pressione minima di funzionamento* (taratura normale).
Sulle apparecchiature RT con *reinserzione di minima,* la pressione nel sistema dei soffietti deve aumentare di un valore corrispondente al differenziale, prima che la reinserzione manuale si possa effettuare.
Gli apparecchi RT con *reinserzione di massima* hanno una scala che é calibrata in modo che la taratura della scala corrisponda all'intervento del contatto relativo *alle pressione massima di funzionamento.* (NOTA: contrariamente alla taratura normale).
La pressione nel sistema dei soffietti deve diminuire di un valore che corrisponde al differenziale, prima che la reinserzione manuale possa essere effettuata.

Accessori Vedere fig. 6, 7 e 8.

NEDERLANDS

Pressostaten

Technische gegevens

Type	Kodenr.	Vergrendeling	Bereik bar (p_e)	Instelbare mechanische differentie bar(Δp)
RT 1	**017-5245**	–	–0.8 → +5	0.5 – 1.6
	017-5246	min.		0.5 vast
RT 1A	**017-5001**	–		0.5 – 1.6
	017-5002	min.		0.5 vast
	017-5007	–		1.3 – 2.4
RT 5	**017-5250**	–	4 → 17	1.2 – 4
	017-5251	max.		1.2 vast
RT 5A	**017-5046**	–		1.2 – 4
	017-5047	max.		1.2 vast

Koelmiddelen
RT 1 en 5: Alle halogene koelmiddelen
RT 1 A en 5A: R 717 (NH_3) en alle halogene koelmiddelen.

Max. werkdruk, PB: 22 bar
Max. beproevingsdruk, p': 25 bar
Max. toelaatbare balgtemperatuur: 70°C
Dichtheid: IP 66 volgens IEC 529

Contactbelasting: zie deksel van contactsysteem of fig.4.
Bijv.10(4) A, 400 V ~ betekent max.10 A niet-inductieve belasting of 4 A inductieve belasting bij een aansluitspanning van 400 V ~.
De maximale aanloopstroom bij het inschakelen van de motor (L.R.) mag maximaal 7 × de inductieve belasting bedragen (max. 28 A). De RT pressostaten voldoen aan de voorschriften volgens VDE* 0660.
*VDE = Verband Deutscher Elektrotechniker.

Montage
De pressostaat is geschikt voor paneelmontage en montage op de compressor zelf. Gebruik de bevestigingsgaten 25.
Wordt het apparaat blootgesteld aan trillingen, dan is montage op een basis met een zachte tussenlaag aan te bevelen.
Eventuele drukpulsaties in het systeem moeten op effektieve wijze worden gedempt, bijvoorbeeld door aansluiting van de pressostaat op het systeem met behulp van een kapillaire leiding, zie fig.6.

Aansluiting Zie fig. 5
START= maken
STOP = verbreken
DIFF = differentie
Kabeldoorsnede: 6 → 14 mm
De aardaansluiting 38 moet met aarde verbonden worden.
Monteer beschermkap.

Instelling Zie fig.2, 3 en 5
De pressostaat moet worden afgesteld op de minimum schakeldruk (bereikinstelling).

NB.: RT 5 en 5A met max. reset (vergrendeling aan de hogedrukzijde) kodenrs. 017-5251 en 017-5047, moeten worden afgesteld op de maximale schakeldruk (bereikinstelling).
De instelling vindt plaats doorverdraaiing van de hoofdspindel 44, waarbij dan gelijktijdig de hoofdschaal 9 afgelezen wordt. De differentie is instelbaar door verdraaiing van de differentie-instelmoer 19 en wordt bepaald met behulp van het diagram van fig. 3.
De maximum schakeldruk is de som van druk-bereikinstelling en de differentie.

Voorbeeld
Een instelling «5», zal bij type RT 1A (kodenr. 017-5007) resulteren in een differentie van ca. 1.8 bar, terwijl bij dezelfde instelling deze bij type RT 5A ca. 2.3 bar zal bedragen.

Algemeen: Verdraaiing van de hoofdspindel verplaatst automatisch zowel de maximale als de minimale schakeldruk (verbreek- en maakdruk) naar boven en beneden, tengevolge van de vaste differentie.Verdraaiing van de differentie-instelmoer daarentegen verandert alleen de maximum schakeldruk.

De schaal van alle RT-typen *zonder vergrendeling* en van RT-typen met *min. reset* (vergrendeling aan de lagedrukzijde) is zodanig gekalibreerd dat de schaalafstelling overeenkomt met de kontaktomschakeling bij de *minimum schakeldruk* (normale afstelling). Bij RT-apparaten met *min. reset* (vergrendeling aan de lagedrukzijde) moet de druk in de balg eerst *toenemen* met een waarde gelijk aan de differentie voordat handinschakeling weer kan plaatsvinden.
RT-apparaten met *max. reset* (vergrendeling aan de hogedrukzijde) hebben een schaal die zodanig gekalibreerd is dat de kontaktomschakeling bij *maximale schakeldruk* plaatsvindt. (N.B.: eén en ander in tegenstelling tot de normale afstelling). De druk in de balg moet eerst *verminderen* met een waarde gelijk aan de differentie, voordat handinschakeling weer kan gebeuren.

Toebehoren Zie fig. 6, 7 en 8.

SUOMEKSI

Pressostaatit

Tekniset tiedot

Malli	Tilausnumere	Palautuspainike	Asettelu-alue bar (p_e)	Aseteltava mekaaninen ero bar(Δp)
RT 1	**017-5245**	–	–0.8 → +5	0.5 – 1.6
	017-5246	alaraja		kiinteä n. 0.5
RT 1A	**017-5001**	–		0.5 – 1.6
	017-5002	alaraja		kiinteä n. 0.5
	017-5007	–		1.3 – 2.4
RT 5	**017-5250**	–	4 → 17	1.2 – 4
	017-5251	yläraja		kiinteä n.1.2
RT 5A	**017-5046**	–		1.2 – 4
	017-5047	yläraja		kiinteä n. 1.2

Kylmäaineet
RT 1 ja 5A: kaikki fluorinoidut
RT 1A ja 5A: R 717 (NH_3) sekä kaikki fluorinoidut

Maks. käyttöpaine, PB: 22 bar
Maks. koestuspaine, p': 25 bar
Korkein sallittu lämpötila palkeessa: 70°C

Kotelointi: IP 66; IEC 529:n

Kosketinkuormitus: Katso kosketinlaitteen kantta tai kuvaa 4.
Merkintä esim.10(4) A,400 V ~ tarkoittaa että saadaan kytkeä maks. 10 A ohminen tai 4 A induktlivinen kourma 400 V ~.
Maksimi käynnistysvirta, moottoria kytkettäessä (L.R.), saa olla jopa seitsemän kertaa induktiivinen kuorma – kuitenkin maks. 28 A.
RT pressostaatii täyttää VDE* 0660.
*VDE = Verband Deutscher Elektrotechniker.

Asennus
Pressostaatti asennetaan venttiilitaululle tai itse kompressoriin.
Käytä kiinnitysreikiä 25.
Mikäli koje voi joutua alttliksi tärinälle, on asennuksessa käytettävä pehmeää alustaa.

Jos laitoksessa eslintyy painesykinteä, on tämä vaimennettava tehokkeasti, esim. yhdistämällä pressostaatti laitokseen kapillaariputkella.
Katso kuva 6.

Sähköliitäntä Katso kuva 8
START= kytkee
STOP= katkaisee
DIFF = ero
Kaapelin läpimitta: 6 → 14 mm
Maadoitusjohto kytketään maadoitusruuviin 38.
Asenna suojahottu paikoillen.

Asettelu katso kuvat 2, 3 ja 5
Pressosteatti asetellaan matalimmalle toimintapaineelle (alueasettelu).

HUOM: RT 5 ja 5A ylärajan palautuspainikkeella (til. n:ot 017-5251 ja 017-5047) asetellaan korkeimmalle toimintapaineelle (alueasettelu).
Asettelu suoritetaan kiertämällä aluekaraa 44 ja vastaava lukema nähdään pääasteikolta 9. Ero asetellaan erorullalla19 diagrammin kuva 3 mukaan.
Korkein toimintapaine on asettelupaineen ja eron summa.

Esimerkki
Erorullan asettelu lukemaan »5« fig. 3 mallissa RT 1A (til. n:o 017-5007) antaa eroksi n. 1.8 bar, kun taas sama asettelu mallissa RT 5A antaa eroksi n. 2.3 bar.

Yleisesti pätee, että aluekaran kiertäminen siirtää automaattisesti sekä ylinta toimintapainetta (katkaisu ja kytkentä) koska erorullan asettelua ei muutettu.
Erorullan kiertäminen muuttaa sen sijaan vain ylintä toimintapainetta.

Kaikki RT-malli *ilman palautuspainiketta,* sekä RT-mallit *alarajan palautuspainikkeella* on asteikoltaan kalibroitu siten, että asteikolle aseteltu arvo vastaa kosketinasennon vaihtumista *matalimmalla toimintapaineella* (normaali asettelu).
RT-malleissa, joissa on *alarajan palautuspainike,* tulee paineen palie-elementissä *nousta* eroasettelun verran ennen kuin käsin suoritettava palautus voi tapahtua.
RT-mailit *ylärajan palautuspainikkeella* on asteikoltaan kalibroitu siten, että asteikolle aseteltu arvo vastaa kosketinasennon vaihtumista *korkeimmalla toimintapaineella* (HUOM: *asettelu päinvastoin* kuin tavallisesti).
Paineen palje-elementissä tulee *laskea* eroasettelun verran, ennen kuin käsin suoritettava palautus voi tapahtua.

Lisätarvikkeet katso kuvat 6,7 ja 8.

017R9518

Thermostats
RT14E, RT101E, RT107E, RT123E

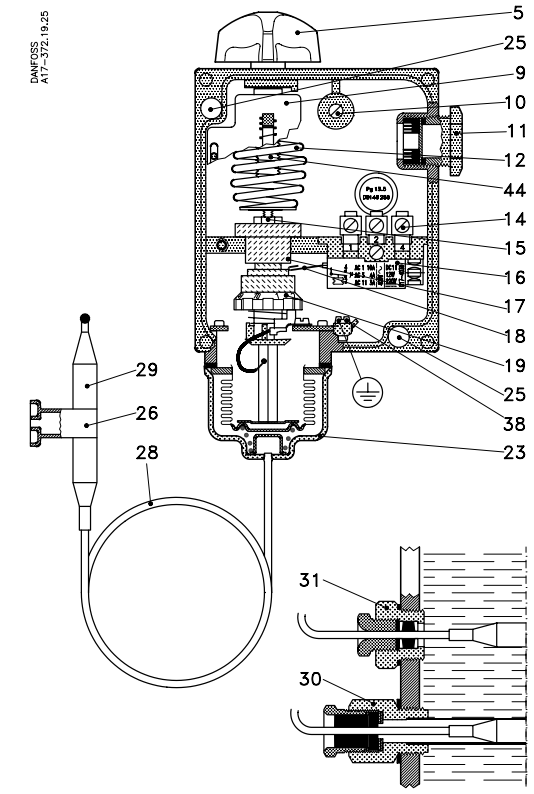

Fig. 1

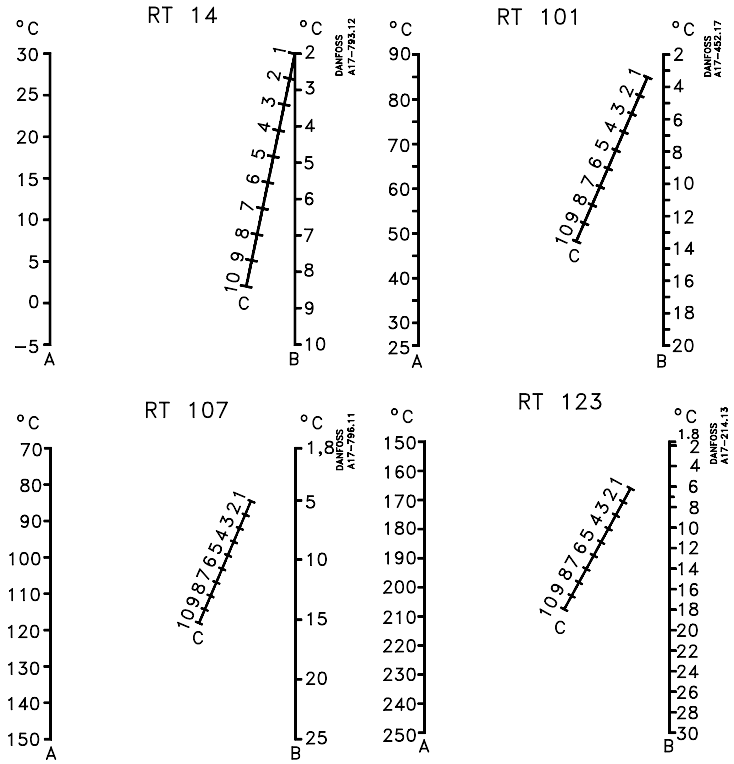

Fig. 2

A: Range setting
B: Diffential obtained
C: Differential setting

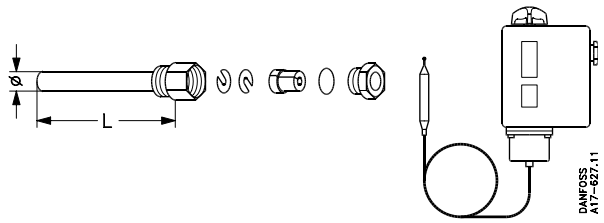

Fig. 3

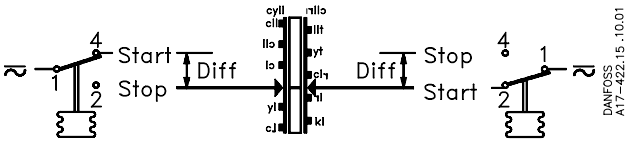

Fig. 4

Product marking

CE 0539 Ex II2G

DEMKO 05 ATEX 135385X

EEx ia IIC T5 **−20°C ≤ Ta ≤65°C**

U_i : 29V **L_i : 0.2µH**

I_i : 0.5A **C_i : 0.5nF**

P_i : 1W

Technical data

Type	RT14E	RT101E	RT107E	RT123E
Range [°C]	−5...30	25...90	70...150	150...250
Max. permissible bulb temperature [°C]	150	300	215	300

Permissible ambient temperature: −20°C to +65°C

Intrinsically safe specification:
U_i = 29V I_i = 0.5A P_i = 1W C_i = 0.5nF L_i = 0.2µH

Contact load: max. 100 mA, 30V a.c./d.c.
min. 1 mA, 5V a.c./d.c.

Installation
RT units can be fitted in any position. Use the mounting holes (25). With outdoor installation, the unit should be protected against rainfall. The bulb should be fixed to the wall by means of a bulb holding bracket (26). If it is desired to install the bulb in a water or brine tank, this can be done by using either a capillary stuffing box (31) or a bulb pocket (30). If bulb pocket is to be used, for correct bulb fitting see fig. 3.

Electrical connection
See fig. 4.
START = make. STOP = break. DIFF. = differential.
Cable diameter: 6-14 mm
The earth terminal (38) should be connected to earth.

Adjustment
Set the thermostat for minimum actuating temperature (range setting). Setting is done by rotating the knob (5), at the same time reading the main scale (9).
The differential is set by rotating the differential adjusting nut (19) according to the nomogram concerned (fig. 2).
Maximum actuating temperature is the sum of the temperature setting and the differential.

Example:
An RT 123 is required to regulate the temperature in a drying oven. Max. temperature 188°C, min. temperature 180°C, differential 188 - 180 = 8°C.

1. Set the thermostat on 180°C with the knob (5).
2. Set the differential adjusting nut (19) on number 3 which can be found by reading off the nomogram for the RT123 in fig. 2.

In general, turning the knob automatically moves both the maximum and minimum actuating temperatures (break and make) up or down because of the fixed differential.
On the other hand, turning the differential adjusting nut only, alters the maximum actuating temperature.

Safety requirements

1) The refrigeration system must always comply with European Ex installation standard, EN 60079-14, any local directive and legislation as well as any other regulation applying in the area of installation.

2) RT-E thermostat must be used only with reliable means of limiting the voltage and current to prevent sparks between the contact surfaces. The equipment to be used for electrical load limiting must be certified for gas group IIC. Also RT-E thermostat must be installed as a part of IIC electrical installation.

3) Cable and cable entries approved for the application must be used. Cables must not be in contact with sharp edges. The cable must be connected with adequate stress relief in order to prevent that pulling forces can be carried through the cable to the terminal.

4) The cycle frequency of the RT-E switch must be kept as low as possible to prevent fatique failure on the bellows. The vibration level must be kept as low as possible.

5) It is recommended to regularly check the function of the RT-E switch.

6) Only apparatus designed, constructed and released by Danfoss must be used for application concerned. Danfoss can accept no responsibility in case of alterations made on the thermostats or the use of them against the instructions of Danfoss.

7) Any overload of the RT switch must be prevented. Overloaded or damaged apparatus must be exchanged.

8) Only authorised persons, who are certified in installing and maintaining refrigration system may do the installation, maintenance and exchange of the switch.

9) Use only appropriate tools

10) Dispose of the swith in an environmentally-friendly way.

017R9518

© Danfoss A/S (AC-DSL/mr) 04 - 2006

Instructions
UT 72 / UT 73

060R9735

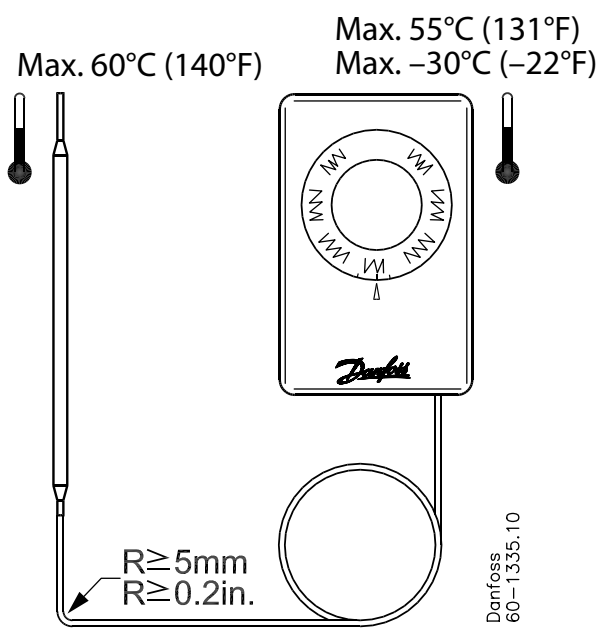

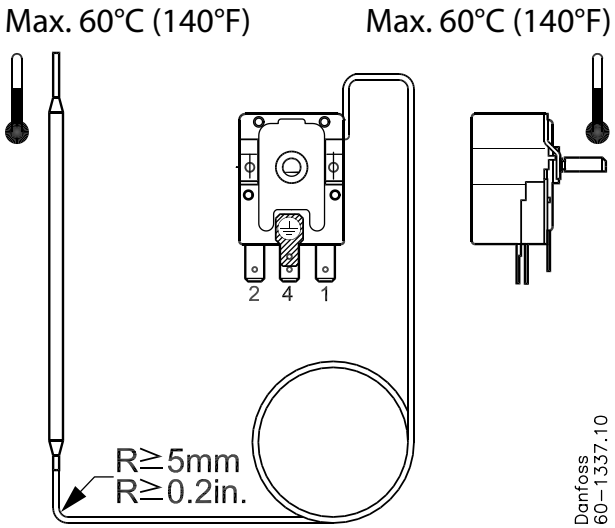

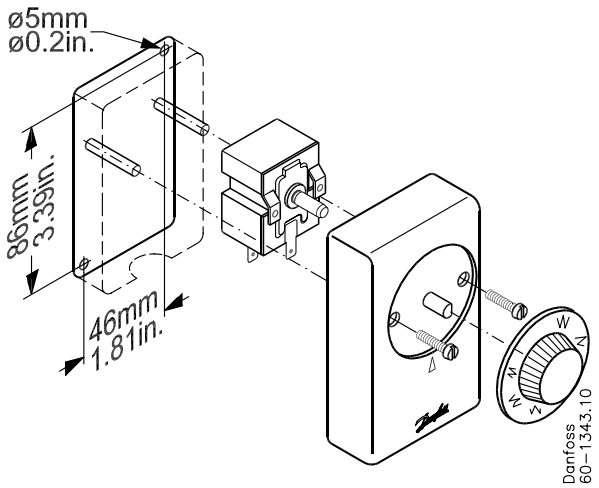

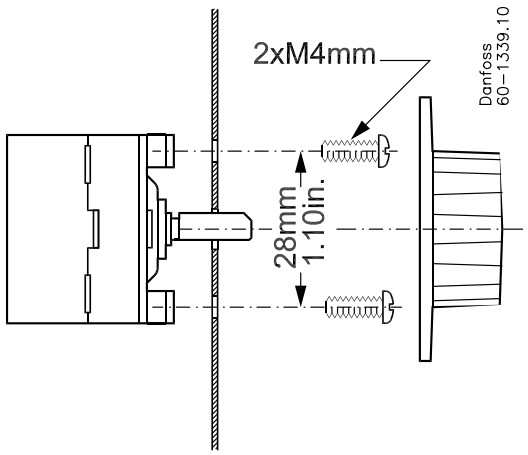

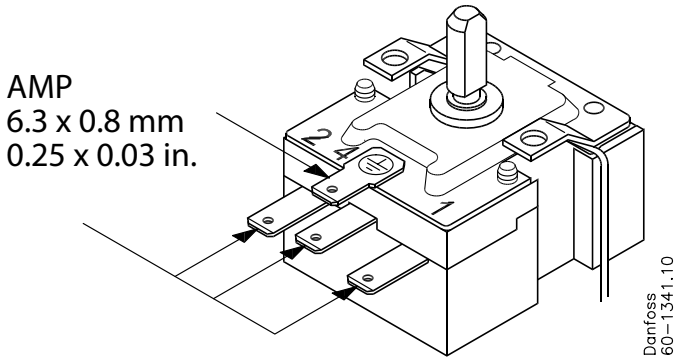

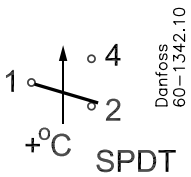

16 (2.5) A / 250V ~
10 (1.5) A / 400V ~

© Danfoss A/S (RC-CMS/HBS), 01-2006 DKRCC.PI.CC0.A1.00 / 520H1169

060R9516

Pressure Controls
KP 1E, KP 7EW, KP 7EB for hydro carbons

060R9516

Media:
Propane (R 290)
Propylene (R 1270)
Butane (R 600)
Isobutane (R 600a)

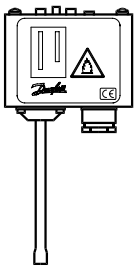

t1 min : -20C
t1 max : 40C

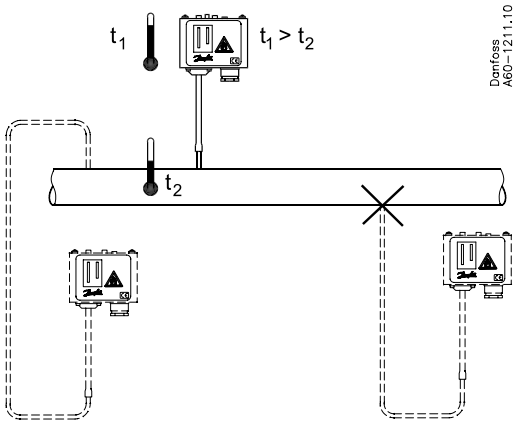

Relative humidity RH:
30 to 98%
vibration resistance:
4g (10-1000 Hz)

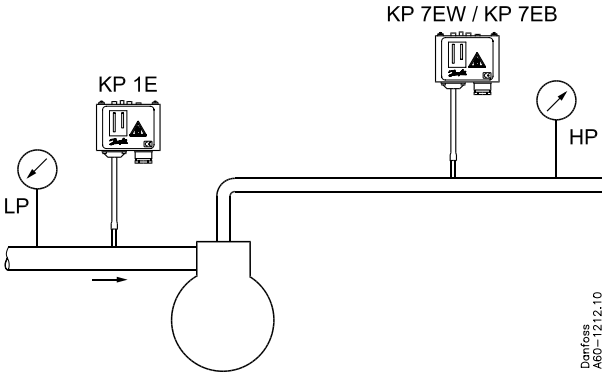

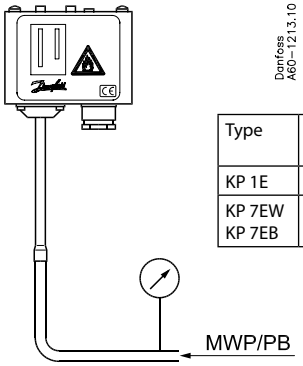

Type	Range	Max. Working Pressure MWP/PB
KP 1E	−0.2→7.5 bar	8.0 bar (e)
KP 7EW KP 7EB	8 → 32 bar	32 bar

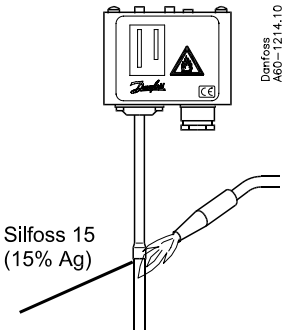

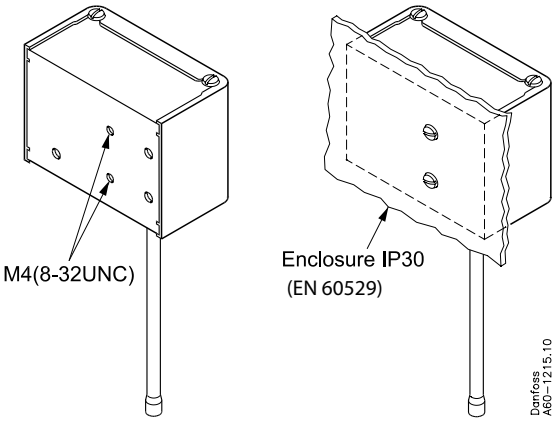

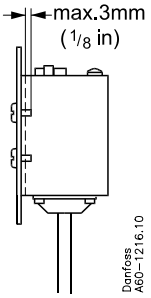

Do not expose to direct sunlight

DKRCCPICA0C102-520H1365

Electrical connection
The power across the contacts must always be limited to prevent sparks between the contact surfaces.

The equipment to be used for current/ voltage limiting must always be approved for use in the zone concerned, e.g. impulse insulator type 5202B and ON/OFF driver type 5203B from PR Electronics A/S, Rønde Denmark (www.prelectronics.com).

Cables and cable entries approved for the application must be used. Cables must not be in contact with sharp edges.
The cable must be connected with adequate stress relief in order to prevent that pulling forces can be carried through the cable to the terminal.

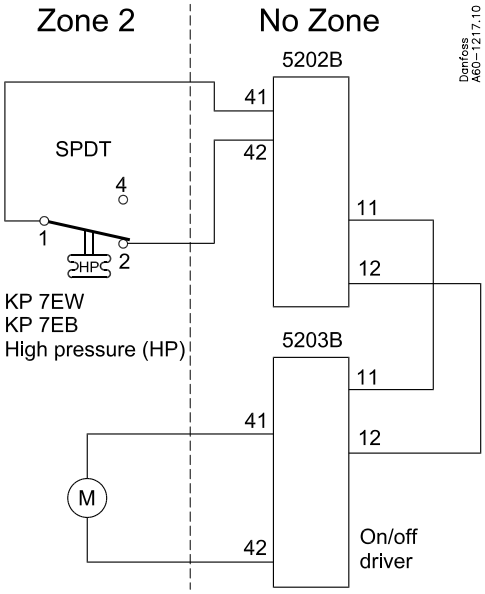

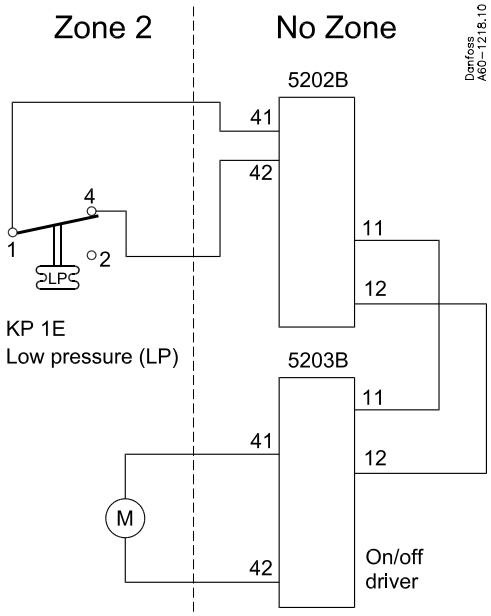

Max. contact load
Curves for energy-limited apparatus and circuits

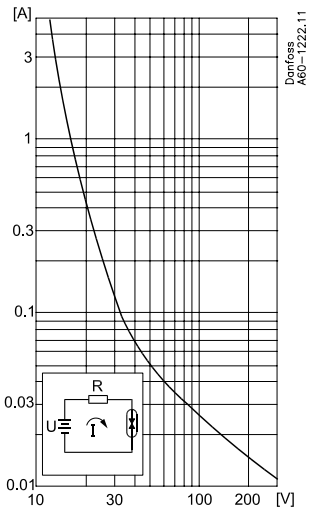

Fig. A1
Resistive circuits

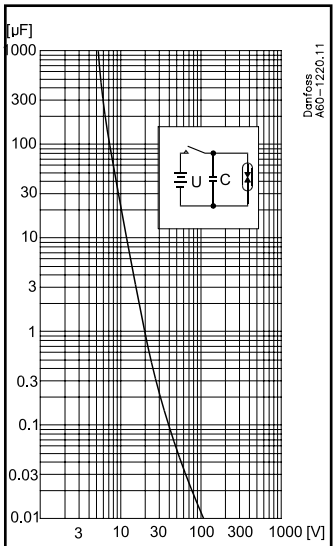

Fig. A2
Capacitive circuits

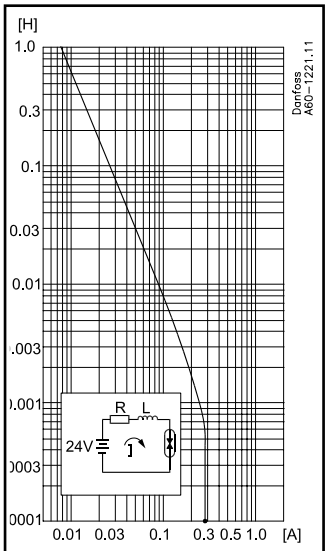

Fig. A3
Inductive circuits

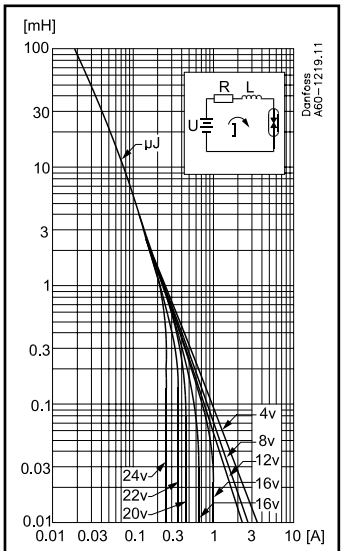

Fig. A4
Low inductive circuits

©Danfoss A/S 04-2006 (AC-DSL/mr)

Contact function

Contact 1-4 opens on pressure drop:

KP 1E

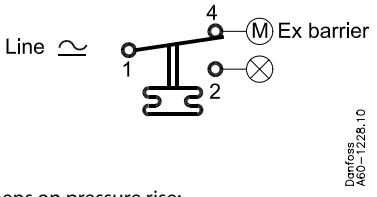

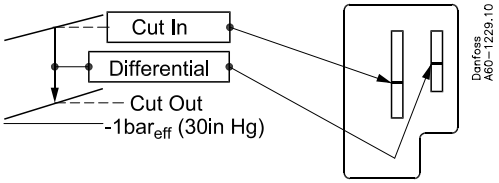

Contact 1-2 opens on pressure rise:

KP 7EW,
KP 7EB

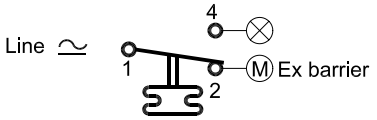

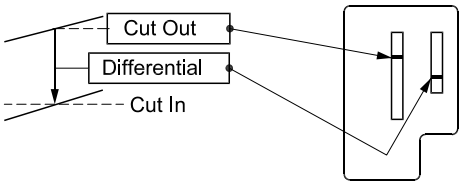

Automatic reset

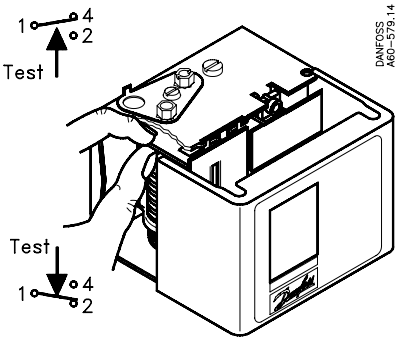

Manual reset

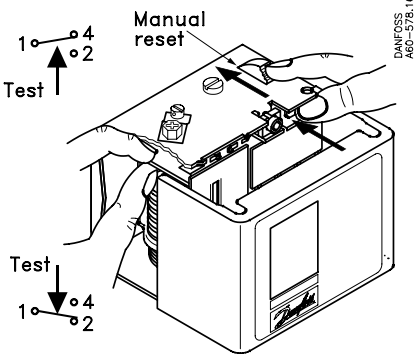

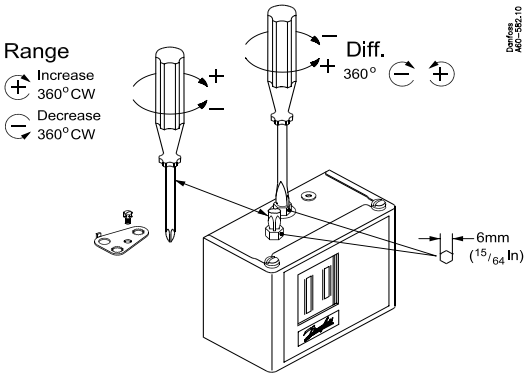

Safety instructions

All national regulations must be complied with in connection with installation, start-up and operation of Danfoss pressure controls type KP 1E, KP 7EW and KP 7EB. Furthermore, the requirements of the Declaration of Conformity and national regulations for installation in explosion areas apply. Disregarding such regulations involves a risk of serious personal injury or extensive material damage. Basic safety and health requrements are fulfilled through compliance with EN 50014:1997 General Regulations, EN 50020:1994 Intrinsic safety "i", EN 50284:1999 Special requirements for .... of electrical apparatus of equipment group II, Cat. 1 G.

Special Ex protection instructions: In the event of damage to enclosure of diaphragm, the pressure control must be replaced if the pressure connection of the controller forms a separation between two zones, of which one of them requires use of Category 1 equipment, the tightness of the pressure connection must be at least IP 67 in accordance with EN 60529.

If versions with plastic plug are installed in Zone 0 with occurence of IIC gasses, the controller must only be installed in surroundings with low wind speed, and where rubbing on the plug is unlikely. Cleaning with a damp cloth is recommended.

The power across the contacts or microswitches must always be limited to prevent sparks between the contact surfaces.
The equipment to be used for current/ voltage limiting must always be approved for use in the zone concerned.

Cables and cable entries approved for the application must be used. Cables must not be in contact with sharp edges. The cable must be connected with adequate stress relief in order to prevent that pulling forces can be carried through the cable to the terminal.

Furthermore, the pressure control must be installed with as less load as possible.
In order to increase lifetime do not expose the apparatus to direct sunlight.

In the event of pressure pulsations in the system, where the controller is connected, these must be effectively damped to prevent fatique failure on the bellows. The cycle frequency of the pressure controls must be kept as low as possible. The vibration level must be kept as low as possible.
It is recommended to regularly check the function of the controller.
Only apparatus designed, constructed and released by Danfoss must be used for the application concerned. Danfoss can accept no responsibility in case of alterations made on the pressure controls or the use of them against the instructions of Danfoss.

It is recommended to make a general estimation of the conditions under which the pressure controls have to operate, especially considering the number of cycles, pressure peaks, pulsations and vibrations the pressure controls are exposed to.

Any overload of the apparatus must be prevented. Overloaded or damaged apparatus must be exchanged.
The atmosphere round the contacts must be controlled and kept inflammable.

Only instructed and trained staff is allowed to install/ exchange/ maintain or set the apparatus.

A system is not allowed to operate in case the safety initiatives are incactivated.
Markings and warning signs must be visible and must not be removed.

© Danfoss A/S (AC-DSL/mr) 04 - 2006

INSTRUCTIONS

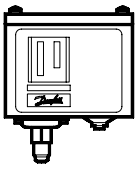

KP Cover

060R9745

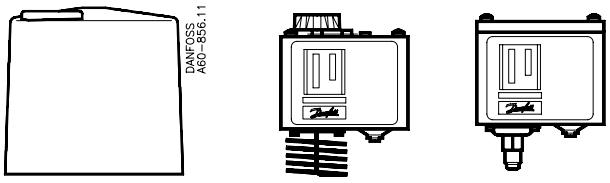

Cover KP 62 KP 1

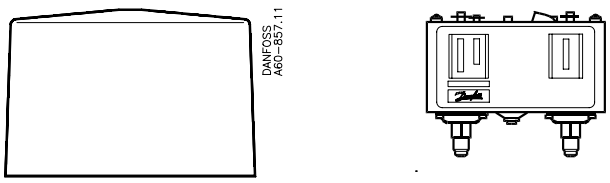

Cover KP 15

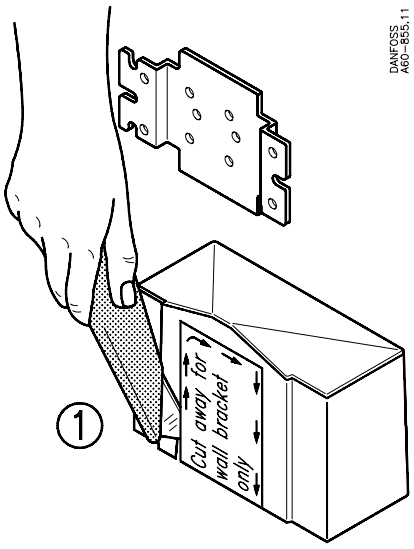

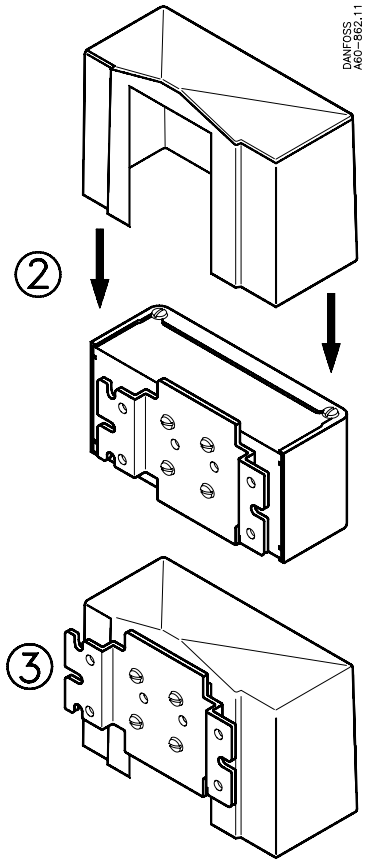

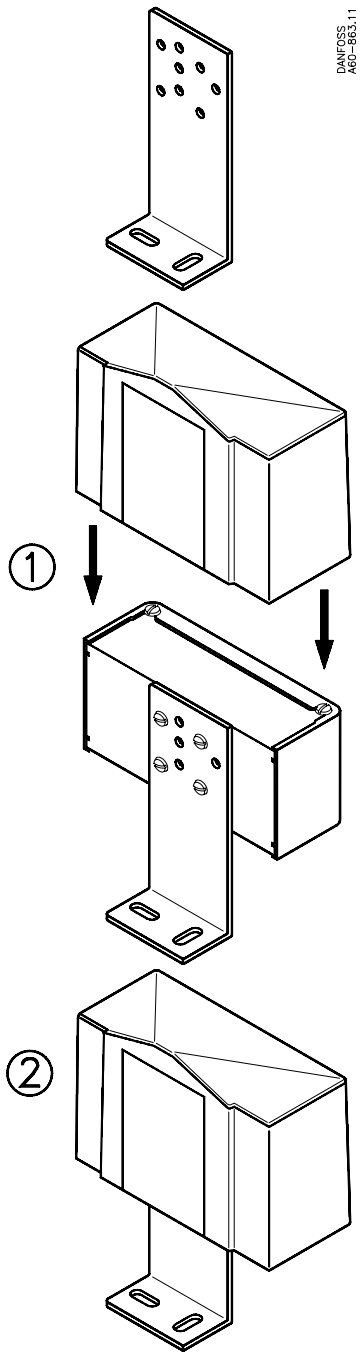

Instructions

060R9766

Dual Pressure Control

KP 44

060R9766

Ambient temperatures

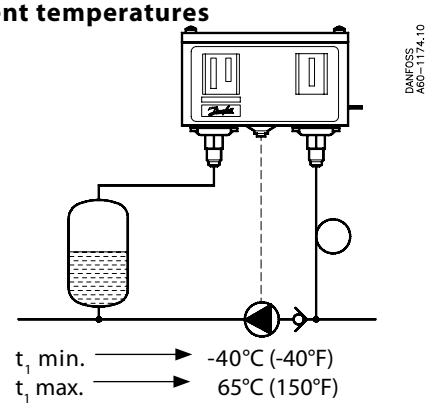

Caution: Do not mount the control in a position where dirt, sediment or oil will affect the operation of the control.

Test pressure (p_{test})

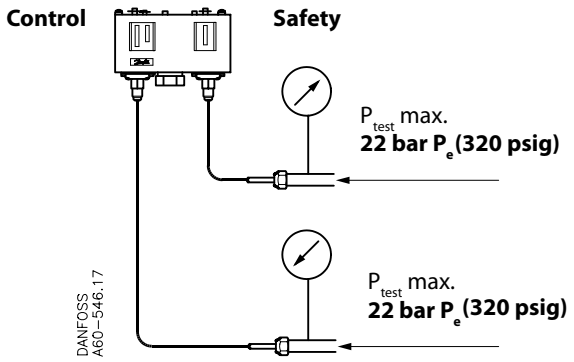

Control MWP → 17 bar P_e (246 psig)
Safety MWP → 17 bar P_e (246 psig)

Connections

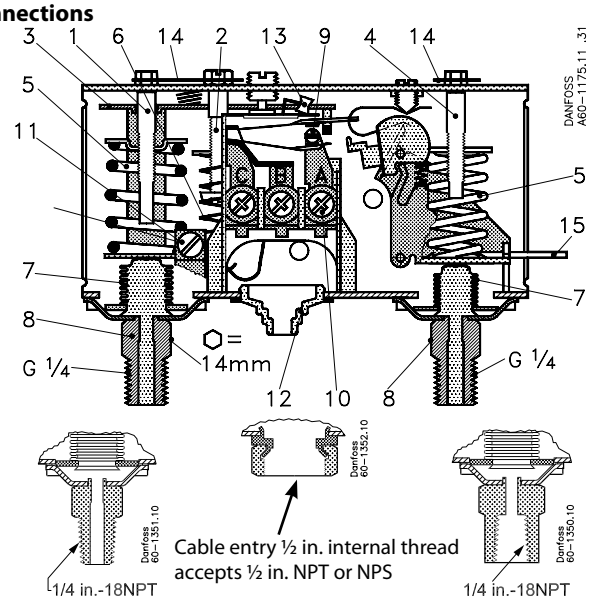

1. Lefthand pressure setting spindle
2. Differential setting spindle
3. Main arm
4. Righthand pressure setting spindle
5. Main spring
6. Differential spring
7. Bellows
8. Pressure connections
9. Switch
10. Terminal
11. Earth terminal
12. Cable entry
13. Tumbler
14. Locking plate
15. Impulse lever

The switch in the KP has a snap-action function, and the bellows moves only when the cut-in or cut-out value is reached.

Enclosure

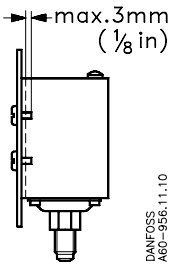

Caution: The mounting panel must be plane to avoid damage of control

Mounting

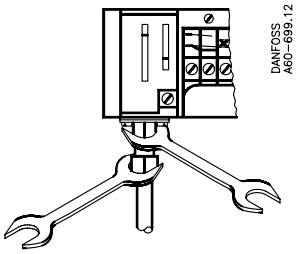

Electrical connections

Contact material AgCdO
Contact load, Ag contact set

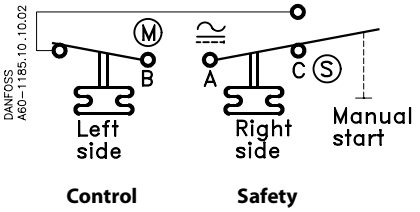

Alternating current:
AC-1: 16A, 400 V
AC-3: 16A, 400 V
AC-15: 10 A, 400 V

Direct current:
DC-13: 12 W, 220 V

Setting

CONTROL side setting

1. Adjust range spindle to desired CUT-IN value
2. Adjust differential spindle to desired DIFFERENTIAL (DIFF.) value

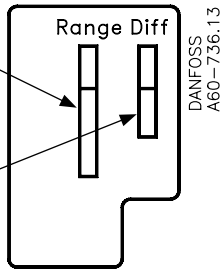

CUT-IN minus DIFFERENTIAL equals CUT-OUT

Example:

CUT-IN – DIFF. = CUT-OUT
8 bar (116 psi) – 2 bar (29 psi) = 6 bar (87 psi)

SAFETY side setting

1. Adjust range spindle to desired CUT-OUT value.
2. DIFFERENTIAL (DIFF.) is fixed. Value printed on scale plate.

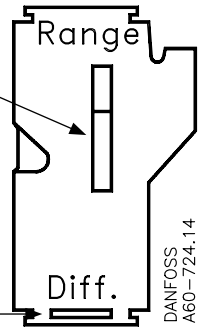

CUT-OUT minus DIFFERENTIAL equal CUT-IN

Example:

CUT-OUT – DIFF. = CUT-IN
4 bar (58 psi) - 1 bar (15 psi) = 3 bar (43 psi)

Adjustment

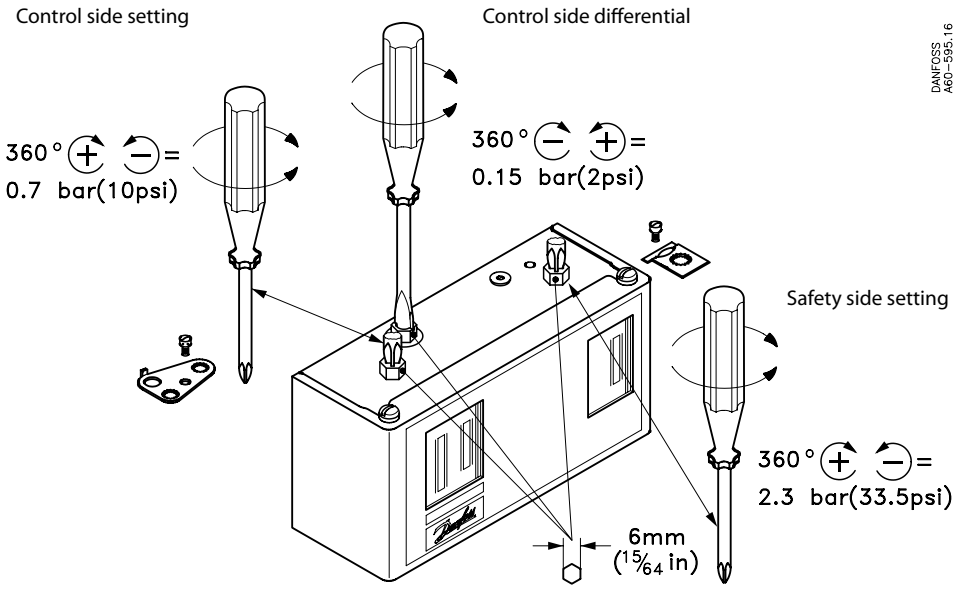

Note:
Remove lockplate before adjustment
Replace lockplate after adjustment (if desired)

©Danfoss A/S 06-2006 (AC-DSL/ mr)

©Danfoss A/S DKRCC.PI.CD0.B1.02-520H1468

Instructions

060R9767

Single KPU Pressure Controls for Low Pressure, Fan Cycling and High Pressure Applications

060R9767

Application

KPU pressure controls are for use on commercial refrigeration and air conditioning systems to give protection against excessively low suction pressure or excessively high discharge pressure.
They are also used for starting and stopping refrigeration compressors and fans on air-cooled condensers.

KPU pressure controls are fitted with the Single-Pole Single-Throw (SPST) or Single-Pole Double-Throw (SPDT) switches, suitable for direct as well as indirect (with a contactor) control.

KPU pressure controls are available in several pressure ranges and are compatible with non-aggressive, fluorinated refrigerants. Standard enclosure is NEMA1.

Product Specification

Application	Type	Code number		Reset	Contact system		Regulating range psig	Differential Δp psi	Max. working pressre psig	Max. testing pressure psig	Ambient temp. °F
		¼" male flare	36" cap. tube w. ¼" flare nut		Type	Switch action					
Low Pressure Control Cut Out on pressure fall	KPU 1	**060-5231**	**060-5233**	Auto.	SPDT		6" to 108	10 to 60	250	290	-40 to 122 (170 for max. 2 hours)
	KPU 1	**060-5236**		Auto.	SPST	close High open Low	6" to 108	10 to 60			
	KPU 2	**060-5237**	**060-5235**	Auto.	SPST	close High open Low	6" to 73	6 to 30			
	KPU 2	**060-5239**	**060-5240**	Auto.	SPDT		6" to 73	6 to 30			
	KPU1B	**060-5232**	**060-5234**	Man.	SPDT		28" to 100	10 fixed			
Fan Cycling	KPU 5	**060-5241**	**060-5242**	Auto.	SPST	close High open Low	100 to 465	25 to 85	510	530	
High Pressure Control Cut Out on pressure rise	KPU 6W	**060-5243**	**060-5245**	Auto.	SPDT		100 to 600	58 to 145	675	725	
	KPU 6B	**060-5244**	**060-5246**	Man.	SPDT		100 to 600	60 fixed			

Installation

Select an accessible location, where the control and pressure connection line will not be subject to damage.

IMPORTANT:
Mount the pressure control in a position that will allow drainage of liquids away from control bellows. Pressure connection of the control must always be located on the top side of the refrigerant line. This reduces the possibility of oil, liquids, or sediment collecting in the bellows, which could cause the control malfunction.

IMPORTANT:
Ensure the ambient temperature for the pressure control is higher than the refrigeration line as that will prevent liquid migration and accumulation in the bellows.

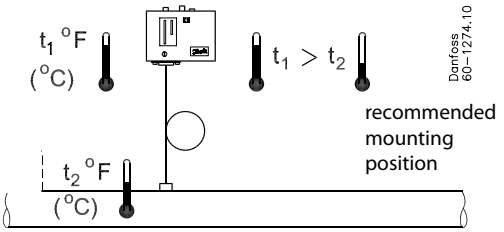

Mount the KPU pressure control on a bracket or on a completely flat surface. Mounting to an uneven surface might cause improper control operation.
For bracket mounting use only the 10-32x3/16 screws provided with the control. If other screws are used function of the pressure control might be disturbed (they may not protrude into the control more than 1/8").

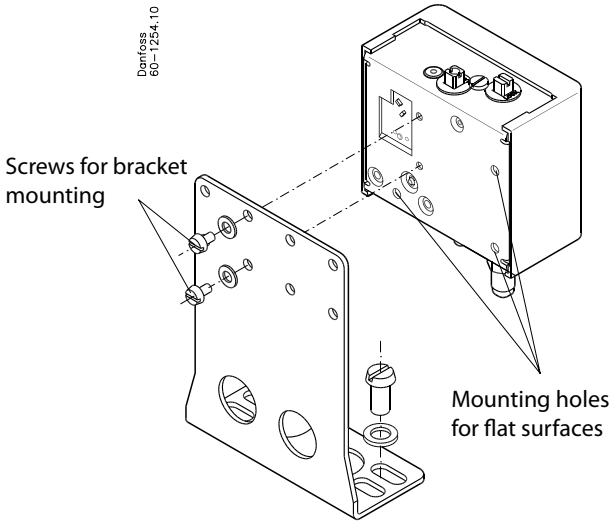

Use only the mounting holes provided; no other holes are to be added to the control

IMPORTANT:
Pressure pulsations in the refrigeration system reduce life time of the bellows and might disturb switch function. Pressure pulsations should always be effectively damped e.g. by connection the pressure controls to the refrigeration system through a capillary tube.

Recommendations for capillary tube and flare connections:

1) Ensure self-draining of the capillary tube to minimize clogging.

2) Coil excess capillary tube into smooth, circular coils (approximately 3 in. diameter). The coiled tube should be securely fastened in order to prevent possible damage due to vibration.

3) Leave a little slack in the capillary tube as it helps to damp mechanical vibrations.

4) Avoid sharp bends as well as re-bending of the capillary tube on the same point as it weakens the material, increasing the risk of crack.

5) Never allow for contact between the capillary tube and sharp or abrasive objects as during vibrations the tube could be damaged due to friction.

6) Purge the piping before connecting pressure controls.

7) Always use two wrenches tightening the flare nut on the pressure control. One wrench should support the connector while the second wrench is used to tighten the nut.

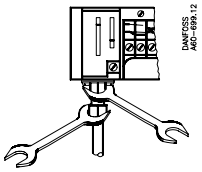

8) Do not over tighten flare nuts as it may damage the threads causing leaks.

9) Protect the capillary tube from damage caused by vibrations from compressor:
- when the control unit is mounted directly on the compressor, the capillary must be secured to the compressor so that everything vibrates as a whole.
- when the control is mounted remote from the compressor, make the pressure connections away from the compressor.
- when the control is mounted remote from the compressor and the pressure connections have to be on the compressor, then damping coils must be used between the compressor and the pressure control.

NOTE:
After installing the pressure control, evacuate the plant in accordance with applicable EPA and other regulations, to remove air, moisture, and other contaminants.

Wiring

CAUTION:
Disconnect power supply before wiring connections are made to avoid possible electrical shock or damage to equipment.
Do never touch live parts with your fingers or with any tool.

NOTE:
All wiring should conform to the National Electrical Code and local regulations.
Use copper wire only.
Use terminal screws furnished in the contact block.
Do not exceed tightening torque 20 lb. in (2.3 Nm).
Do not exceed electrical ratings for the control.

Electrical ratings according to UL regulations

120 V a.c.	24 FLA, 144 LRA - make only
240 V a.c.	24 FLA, 144 LRA - make only
240 V d.c.	12 W pilot duty

European electrical ratings according to EN 60947

AC1	AC3	AC15	LR	DC13
16 A	16 A	10 A	112 A	12 W
400 V				220 V

The terminal block as well as grounding screw are accessible after dismounting of the front cover.

Wiring Option A:
- Low Pressure Control Cut Out on pressure fall
- Condenser Fan Cycling

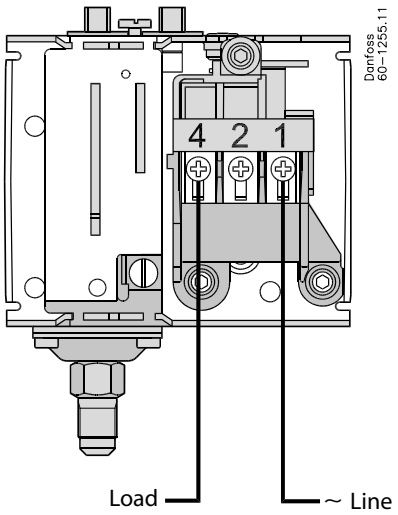

Wiring Option B:
- High Pressure Control Cut Out on pressure rise

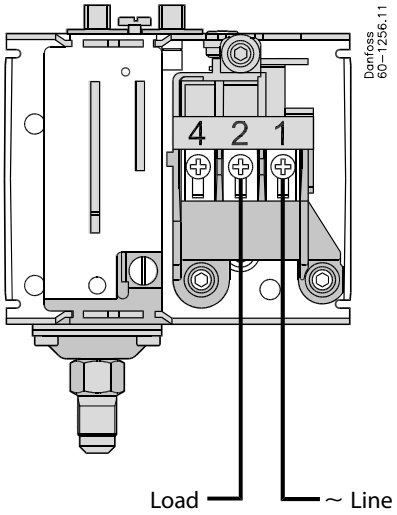

Wire dimensions: 10 AWG max.
Cable entry: 7/8" cable entry for ½" male pipe thread connection (conduit boss) or similar (Pg13.5 or Pg16) screwed cable entry.

Contact function test (Manual trip)

When the electrical leads are connected the contact function can be manually tested regardless of pressure condition in the system. The manual trip lever is located in the left side of the KPU. It must be operated with fingers only. Do not use screwdriver as it will damage the control.

NOTE:
While operating the manual trip on KPU controls with manual reset it is necessary to push the reset knob.

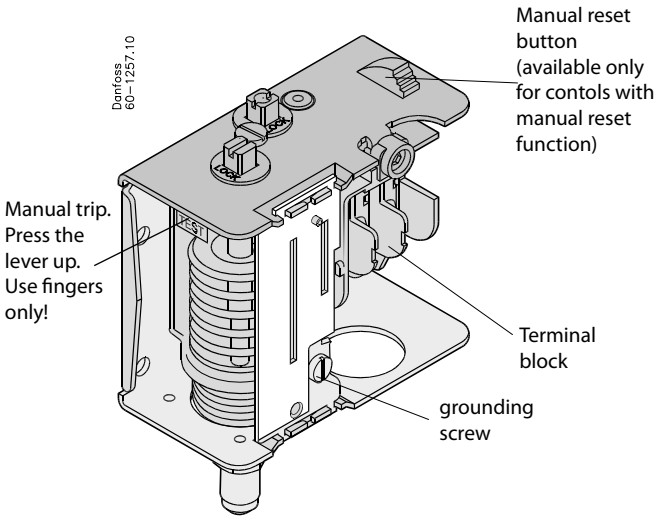

Adjustment

NOTE:
Adjust the pressure control with settings specified by the manufacturer of the controlled quipment.
Do not exceed the pressure ratings of the controlled equipment or any of its components when checking pressure control operation or operating the controlled equipment.
Do not adjust pointers beyond the highest or lowest indicator marks on the scale plate, as this may cause inaccurate control operation.

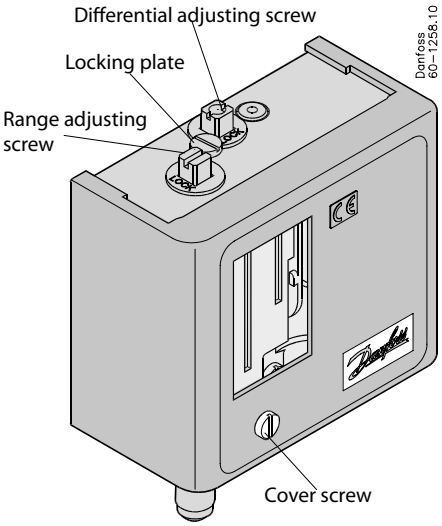

Before adjustment, loosen the locking plate.
For setting use the Universal Refrigeration Wrench.

IMPORTANT: The scale plate is only for reference and for more precise setting a pressure gauge should be used.

IMPORTANT: After installing and adjusting pressure control run the controlled equipment several times (at least three cycles) at normal operating conditions .

Adjustment: Low Pressure Control
Cut out on pressure fall with automatic reset.

Scale plate directly indicates the Cut In and the Differential set points.

1. Set Cut In by adjusting range screw. Turn the screw clockwise to lower the set point.

2. Then set Differential by adjusting differential screw. Turn the screw clockwise to increase the Differential

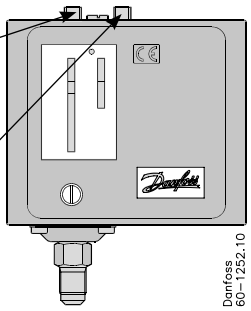

3. The Cut Out setting equals the Cut In less the Differential:
CUT OUT = CUT IN - DIFFERENTIAL

NOTE: Cut Out set point must be above absolute vacuum! If the Differential is set too high then the control will not stop the compressor.

Adjustment: Low Pressure Control
Cut out on pressure fall with manual reset.

Scale plate directly indicates the Cut Out set point. There is no pointer for the Differential.
The Differential pressure value is fixed and printed on the scale plate.

1. Set Cut Out by adjusting range screw. Turn the screw clockwise to lower the set point.

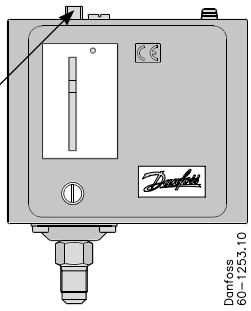

2. The Cut In setting equals the Cut Out plus the Differential:
CUT IN = CUT OUT + 10 psi

Adjustment: Condenser Fan Cycling
Scale plate directly indicates the Cut In and the Differential set points.

1. Set Cut In by adjusting range screw. Turn the screw clockwise to lower the set point.

2. Then set Differential by adjusting differential screw. Turn the screw clockwise to increase the Differential

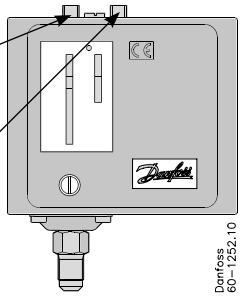

3. The Cut Out setting equals the Cut In less the Differential:
CUT OUT = CUT IN - DIFFERENTIAL

Adjustment: High Pressure Control
Cut Out on pressure rise with automatic reset.

Scale plate directly indicates the Cut Out and the Differential set points.

1. Set Cut Out by adjusting range screw. Turn the screw clockwise to rise the set point.

2. Then set Differential by adjusting differential screw. Turn the screw clockwise to decrease the Differential

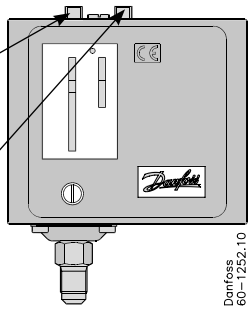

3. The Cut In setting equals the Cut Out less the Differential:
CUT IN = CUT OUT - DIFFERENTIAL

Adjustment: High Pressure Control
Cut Out on pressure rise with manual reset.

Scale plate directly indicates the Cut Out set point.
There is no pointer for the Differential.
The Differential pressure value is fixed and printed on the scale plate.

1. Set Cut Out by adjusting range screw. Turn the screw clockwise to rise the set point.

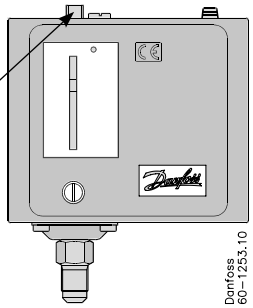

2. The Cut In setting equals the Cut Out less the Differential:
CUT IN = CUT OUT - 60 psi

©Danfoss A/S, IC-MC-mr, 01-2005

INSTRUCTIONS

KP 1, 1A, 5, 5A
w/goldplated contacts

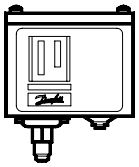

060R9504

KP 1, 5: CFC, HFC, HCFC
KP 1A, 5A: R 717 (NH_3)

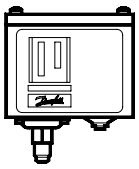

KP 1, 1A, 5, 5A

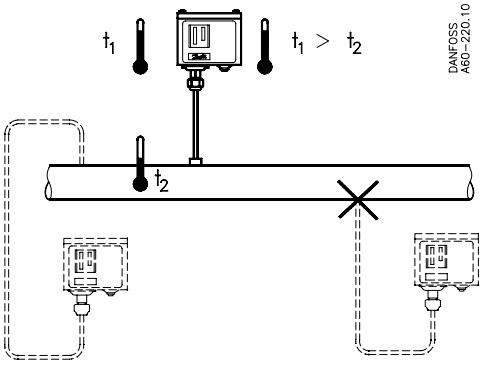

t_1 min. KP 1, 1A, 5, 5A: –40°F (–40°C)
t_1 max. KP 1, 1A, 5, 5A: +65°C (150°F)

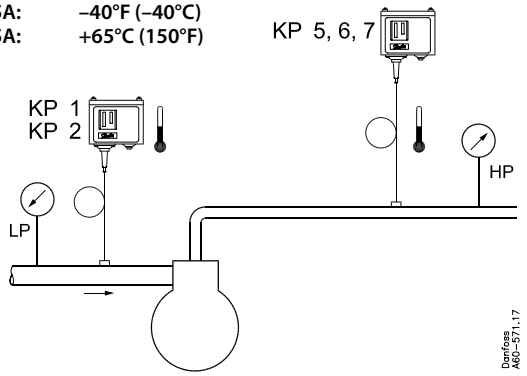

KP 1, 5

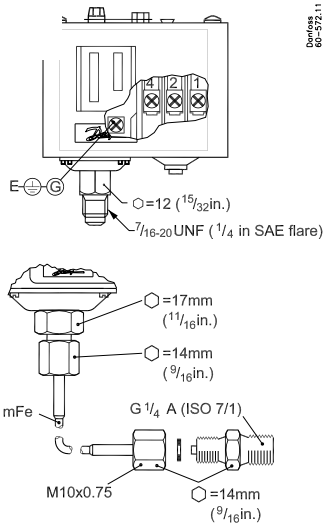

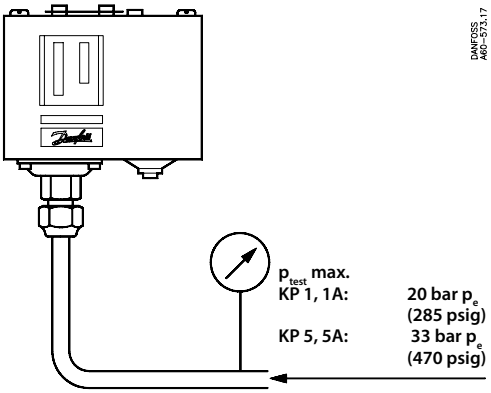

p_{test} max.
KP 1, 1A: 20 bar p_e (285 psig)
KP 5, 5A: 33 bar p_e (470 psig)

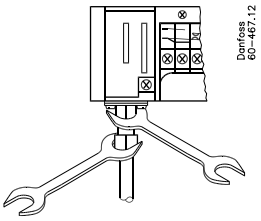

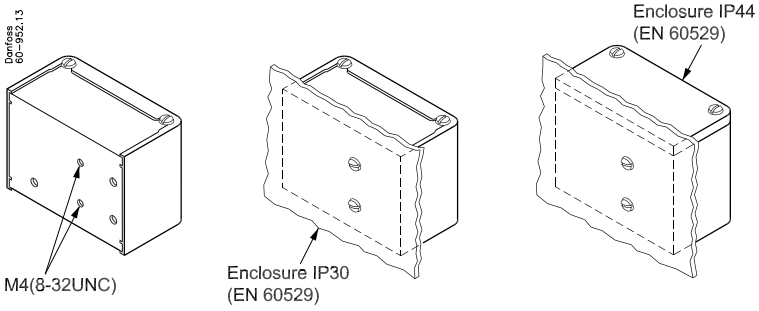

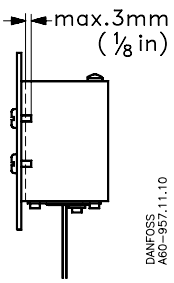

© Danfoss A/S

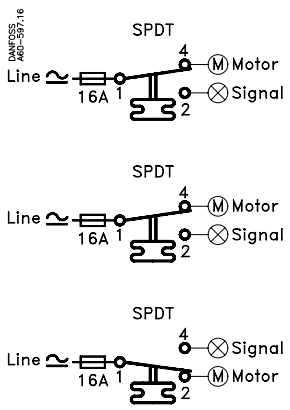

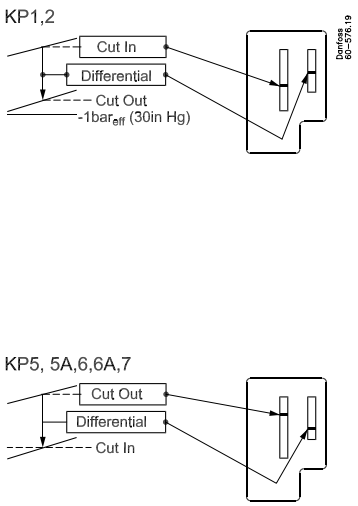

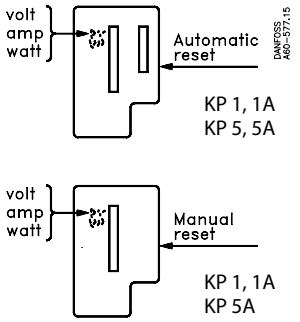

Contact load

Regulation	Max.:	100 mA / 30 V	a.c. / d.c.
	Min.:	1 mA / 5 V	a.c. / d.c.
Alarm	Max.:	10 A / 400 V	a.c.
		12 W / 220 V	d.c.
	Min.:	1 mA / 5 V	a.c. / d.c.

Automatic reset

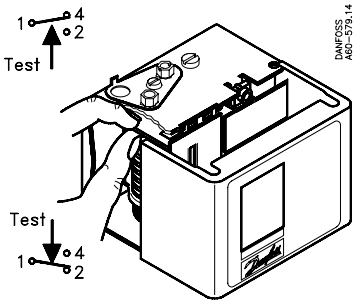

KP 1, 5, 5A

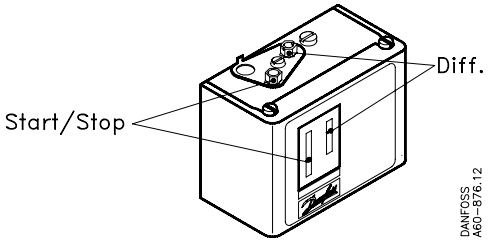

KP 1, 1A, 5, 5A

Manual reset

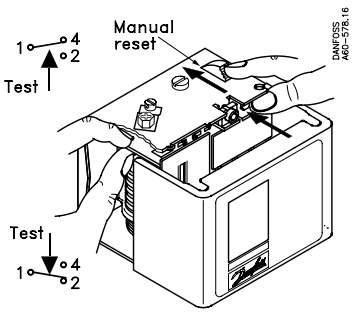

KP 1, 1A, 5, 5A

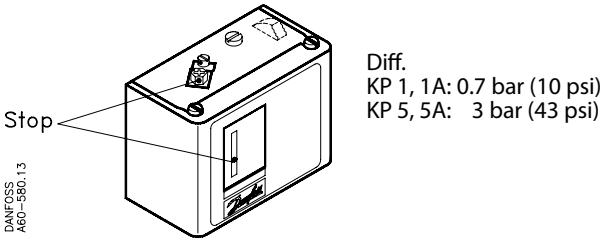

KP 1, 1A, 5, 5A

Type	Range	PB
KP 1	−0.2 → 7.5 bar	17 bar
KP 1 reset	−0.9 → 7 bar	17 bar
KP 5	8 → 32 bar	35 bar
KP 5 reset	8 → 32 bar	35 bar

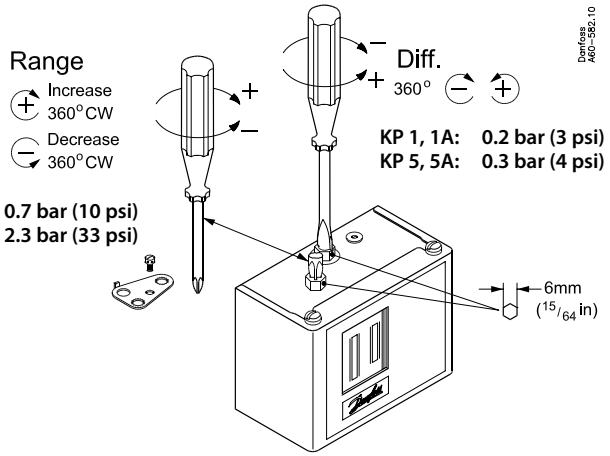

© Danfoss A/S (IC-MC,mr) 01-2003

Instructions

060R9513

Differential pressure controls MP 54, MP 55, MP 55A

MP 54, MP 55: CFC, HFC, HCFC
MP 55A: R 717 (NH_3), CFC, HFC, HCFC

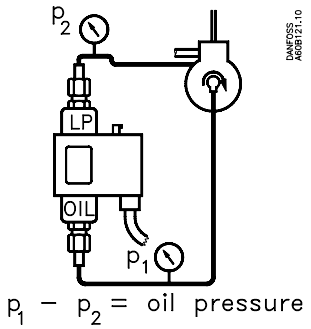

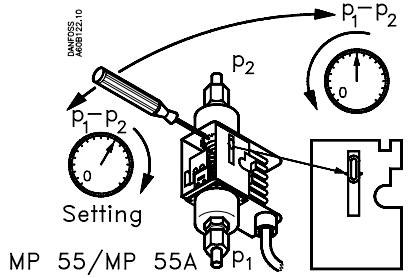

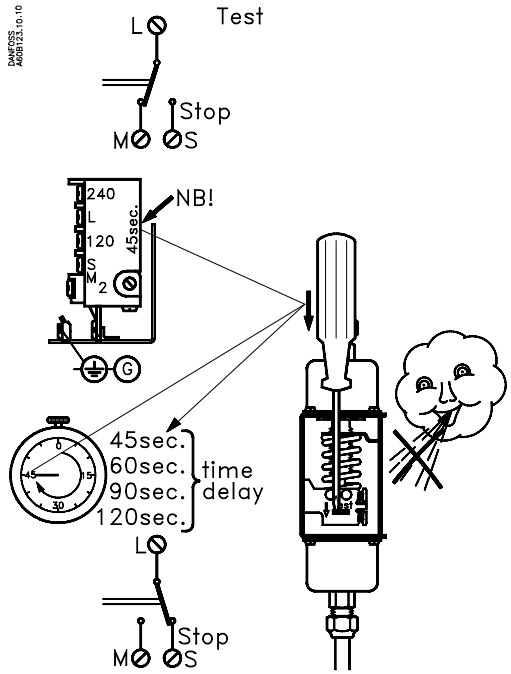

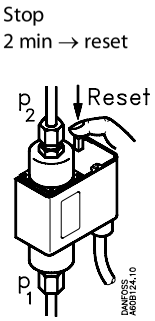

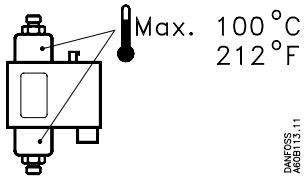

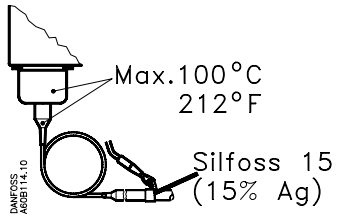

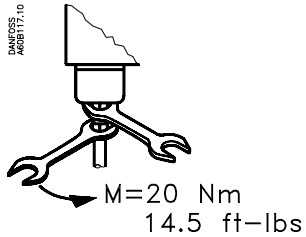

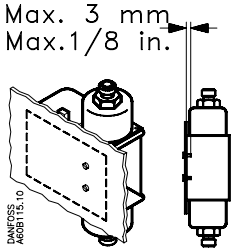

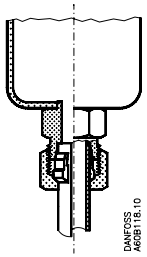

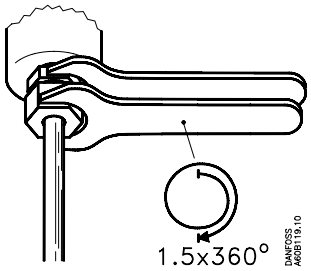

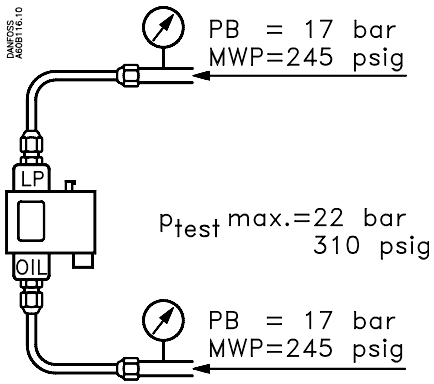

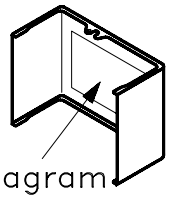

060R9753

Pressure Controls
KP 15, KP 15A, KP 17W, KP 17B, KP 17WB

KP 15, 17W, 17B, 17WB: CFC, HFC, HCFC
KP15A: R717(NH_3)

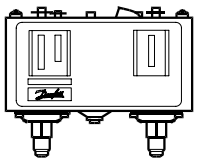

KP 15, 17

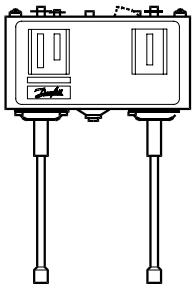

KP 15, 17

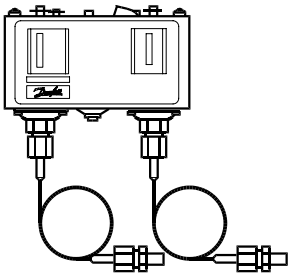

KP 15A

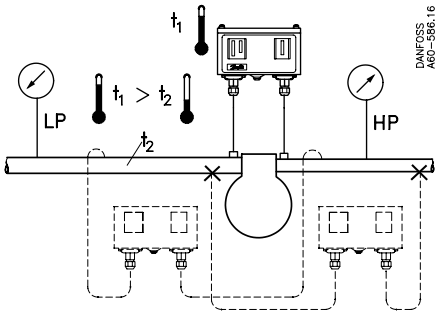

Relative humidity RH:
30 to 98%
Vibration resistance:
4g (10-1000 Hz)

t_1 min. KP 15: –40°C (–40°F)
KP 17: –25°C (–13°F)
t_1 max. 65°C (150°F)

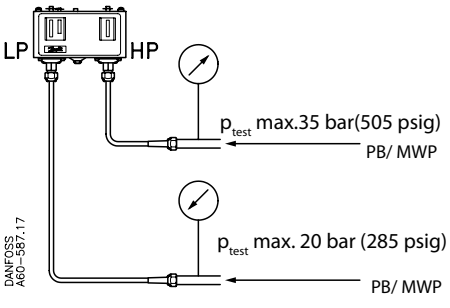

Type	Range	Max working pressure PB/MWP	
KP 15	LP: -0.2 → 7.5 bar HP: 8 → 32 bar	17 bar 35 bar	250 psi 505 psi
KP 15 LP man. reset	LP: -0.9 → 7 bar HP: 8 → 32 bar	17 bar 35 bar	250 psi 505 psi
KP 17	LP: -0.2 → 7.5 bar HP: 8 → 32 bar	17 bar 35 bar	250 psi 505 psi

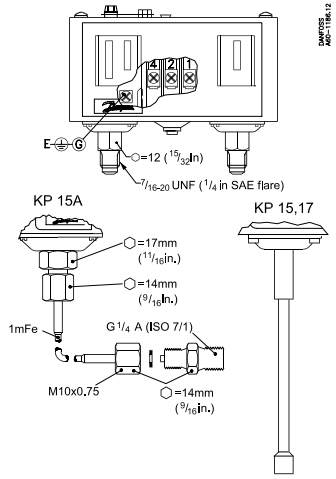

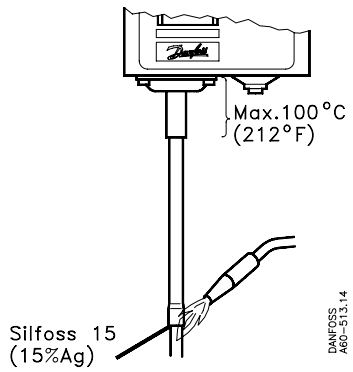

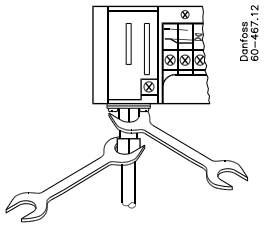

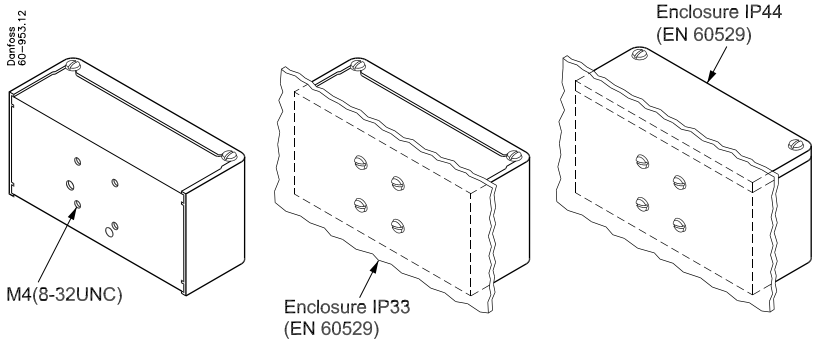

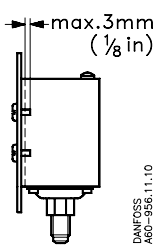

DKRCC.PI.CDO.A2.02-520H0551

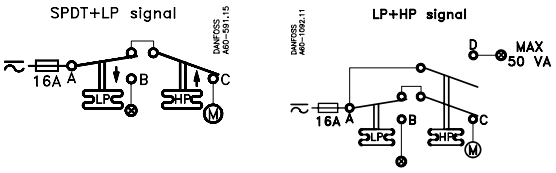

LP side: A-C opens on pressure drop
HP side: A-C opens on pressure rise

Electrical rating - General

LR 112A	AC1 16 A AC3 16 A AC15 10 A	400 V~	DC 13 12 W 220 V~

Short circuit protection:
Fuse 16 Amp

When used acc. to UL regulations

Listed refrigeration controller 61B5

Contacts	Voltage AC	Voltage DC	FL A	LR A	Resist. load	Pilot duty
A-B A-C	240		8	48	8A	3A
	120		16	96	16A	
		240				12 W
A-D	240					50 VA

Use copper wire only
Tightening torque 20 lb. in.

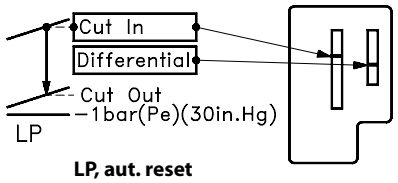

LP, aut. reset

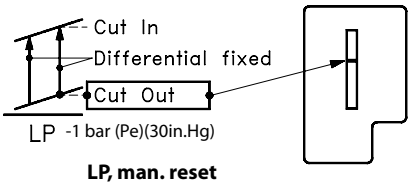

LP, man. reset

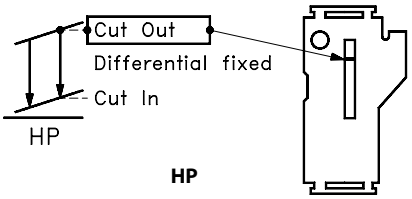

HP

Manual test

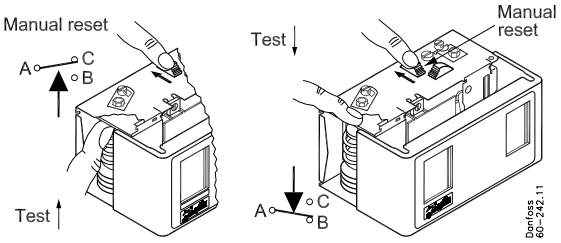

Convertible reset
KP15: LP/HP convertible, KP17WB: HP convertible

Insert a screwdriver into the slot on the lock disc and turn it to desired reset configuration. Do not turn the screw on the lock disc as it may damage the convertible reset mechanism.

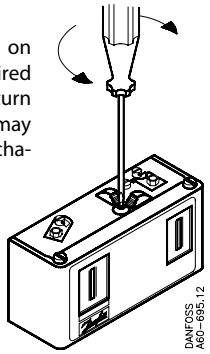

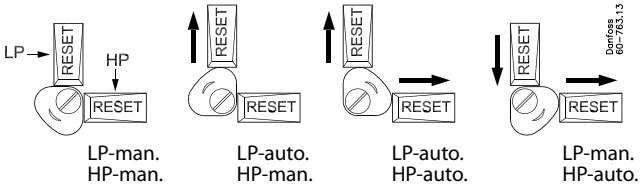

LP-man. HP-man. | LP-auto. HP-man. | LP-auto. HP-auto. | LP-man. HP-auto.

Note: Do not select automatic reset if safety of the system requires manual reset.
Note: Selected reset configuration may be protected against unauthorized actions applying a seal.

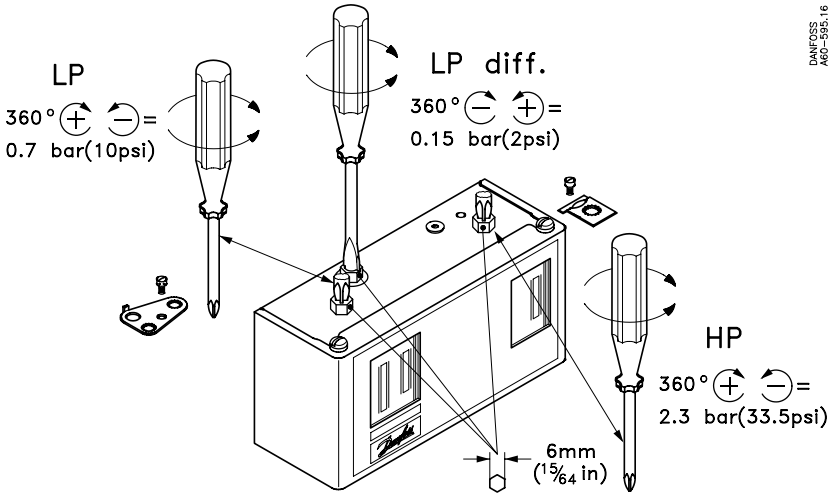

©Danfoss A/S 04-2006 (AC-DSL/mr)

INSTRUCTIONS

KP 1A, KP 2A, KP 5A

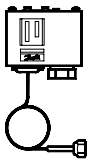

060R9751

Refrigerants

The ammonia controls can be used with R 711 (NH_3) refrigerants.

060R9751

Mounting requirements

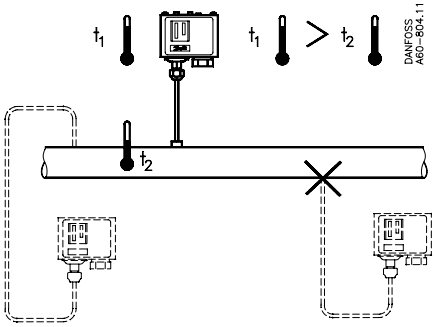

CAUTION: Do not mount the control in a position where dirt, sediment, or oil will affect the operation of the control.

Ambient temperatures

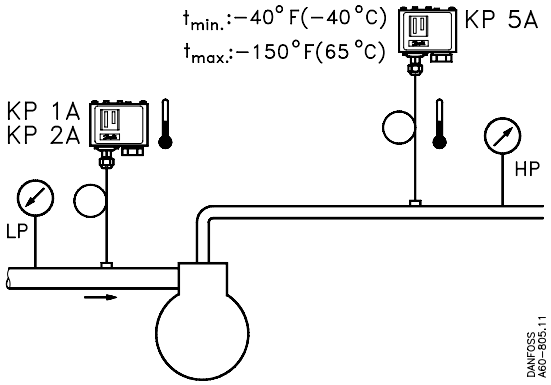

Test pressure (p_{TEST})

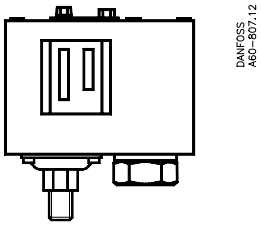

p_{test} max.
KP 1A, 2A: 285 psig (20 bar p_e)
KP 5A: 505 psig (35 bar p_e)

Enclosure

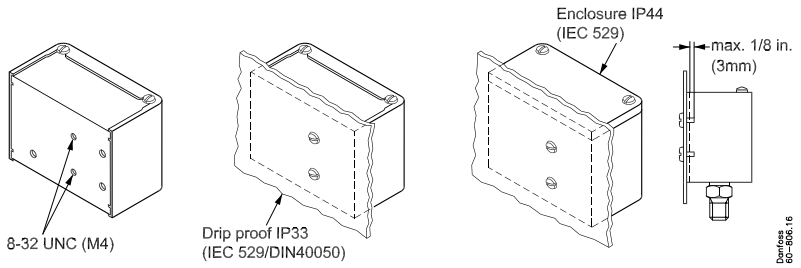

CAUTION: The mounting panel must be plane to avoid damage of control.

Connections

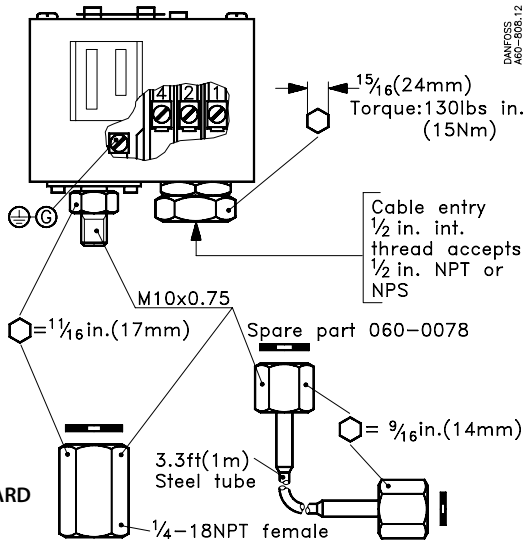

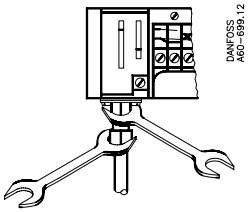

© Danfoss A/S

Wiring

CAUTION: Disconnect power supply before wiring connections are made to avoid possible electrical shock or damage to equipment.
All wiring should conform to the National Electrical Code and local regulations.

Terminal block

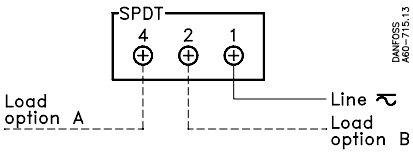

CAUTION: Use terminal screws furnished in the contact block.
Use tightening torque 20 lb. in (2.3 Nm).
Use copper wire only.

Contact load ratings

120 V a.c.	16 FLA, 96 LRA
240 V a.c.	8 FLA, 48 LRA
240 V d.c.	12 W pilot duty

Load Option A

CUT-OUT on pressure drop
Wire terminals 1-4:
CUT-IN = High Set Point (HSP)
see "Setting"
CUT-OUT = Low Set Point (LSP)
see "Setting"

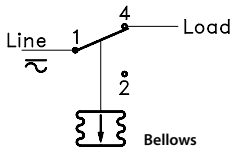

Terms 1-4 close on pressure rise
Terms 1-4 open on pressure drop

Example:	**CUT-IN**	**= 30 psig**	
	CUT-OUT	**= 10 psig**	
This means	**CUT-IN**	**= HSP**	**= 30 psig**
and	**CUT-OUT**	**= LSP**	**= 10 psig**

Note:
= Bellows movement on pressure rise
¬ = Bellows movement on pressure drop
The free terminal can be used for signal purpose.

Load Option B

CUT-OUT on pressure rise
Wire terminals 1-2:
CUT-IN = Low Set Point (LSP)
see "Setting"
CUT-OUT = High Set Point (HSP)
see "Setting"

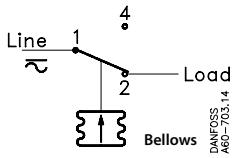

Terms 1-2 close on pressure drop
Terms 1-2 open on pressure rise

Example:	**CUT-IN**	**= 250 psig**	
	CUT-OUT	**= 350 psig**	
This means	**CUT-IN**	**= LSP**	**= 250 psig**
and	**CUT-OUT**	**= HSP**	**= 350 psig**

Manual tripping

(Electrical contacts/wiring test)

TRIP (main lever)
use FINGERS ONLY!
(Do NOT use screwdriver)

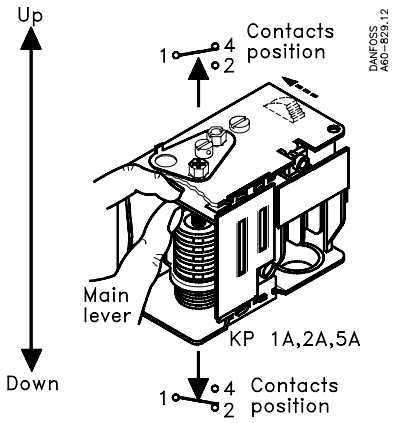

Note:
KP 1A and KP 5A w/man. reset:
Push manual reset knob during manual tripping.

Manual reset

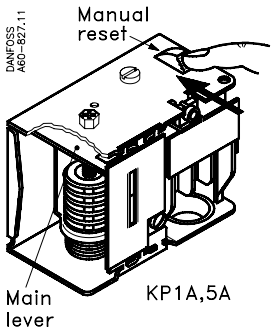

To resume control operation after safety cutout, push reset knob as indicated.

Note:
KP 1A, man. reset is possible only after a pressure rise of 10 psi (0.7 bar).
KP 5A, man. reset is possible only after a pressure drop of 43 psi (3.0 bar).

Adjustment spindle(s) location

Auto reset

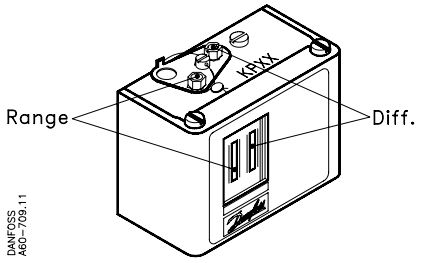

KP 1A, 2A, 5A

Manual reset

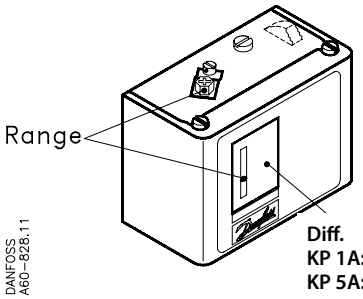

Diff.	**(fixed)**
KP 1A:	**10 psi (0.7 bar**
KP 5A:	**43 psi (3 bar)**

KP 1A, 5A

RI.5A.L2.22 © Danfoss A/S

Setting
(se also "Wiring")

KP 1A (auto. reset), KP 2A and KP 5A

Scale plate

1. **Adjust range spindle to desired HIGH SET POINT (HSP)**
2. **Adjust differential spindle to desired DIFFERENTIAL (DIFF.)**

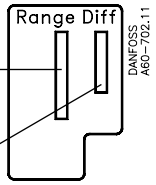

KP 1A (manual reset ONLY)

Scale plate

1. **Adjust range spindle to desired LOW SET POINT (LSP)**
2. **DIFFERENTIAL is fixed. Value printed on scale plate**

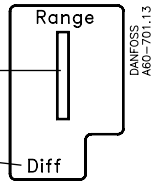

Note:
KP 5A (manual reset) has fixed diff.
Value printed on scale plate.

HIGH SET POINT minus DIFFERENTIAL equals LOW SET POINT

Example:

HSP	**–**	**DIFF.**	**=**	**LSP**
30 psig	**–**	**20 psi**	**=**	**10 psig**
(2.1 bar)		**(1.4 bar)**		**(0.7 bar)**

LOW SET POINT plus DIFFERENTIAL equals HIGH SET POINT

Example:

LSP	**+**	**DIFF.**	**=**	**HSP**
12 psig	**+**	**10 psi**	**=**	**22 psig**
(0.8 bar)		**(0.7 bar)**		**(1.5 bar)**

Adjustment
See instruction printed on top of control

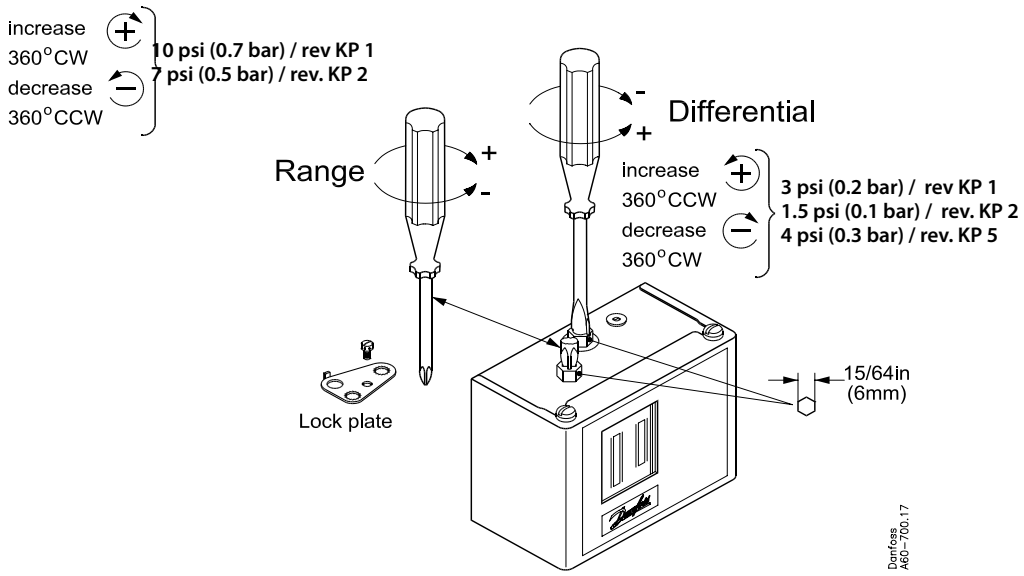

Note:
Remove lockplate before adjustment.
Replace lockplate after adjustment (if desired).

RI.5A.L2.22 © Danfoss A/S

Instructions

Pressure controls RT 6W, 6B, 6S, 6AW, 6AB, 6AS, RT 30AW, 30AB, 30AS, 36B, 36S, TÜV

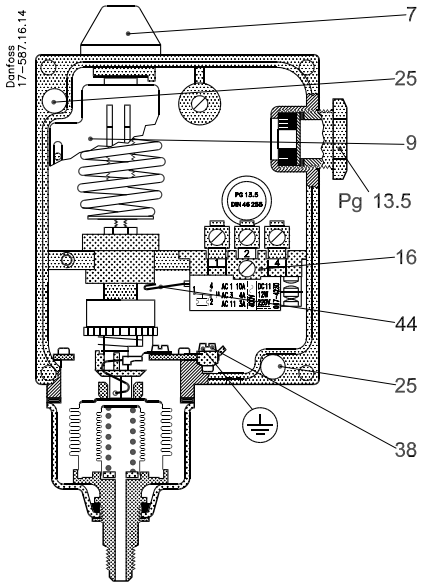

Fig. 1
RT 6W, 6B, 6S, 36B, 36S

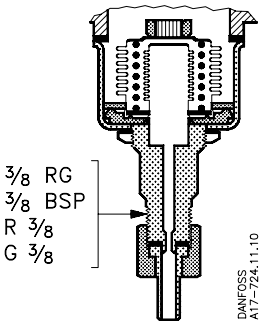

Fig. 2
RT 6AW, 6AB, 6AS

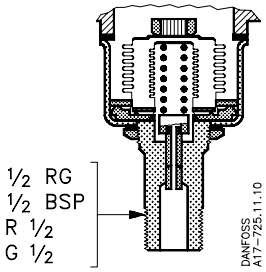

Fig. 3
RT 30AW, 30AB, 30AS

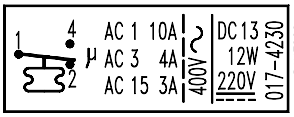

Fig. 4

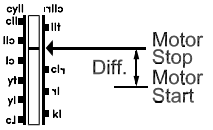

Fig. 5

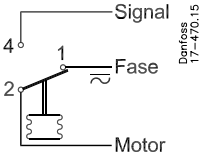

Fig. 6

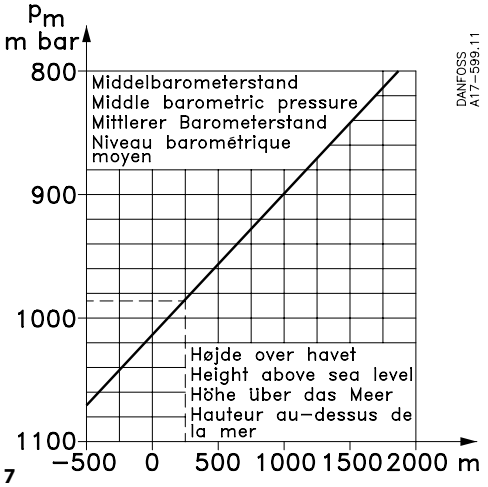

Fig. 7

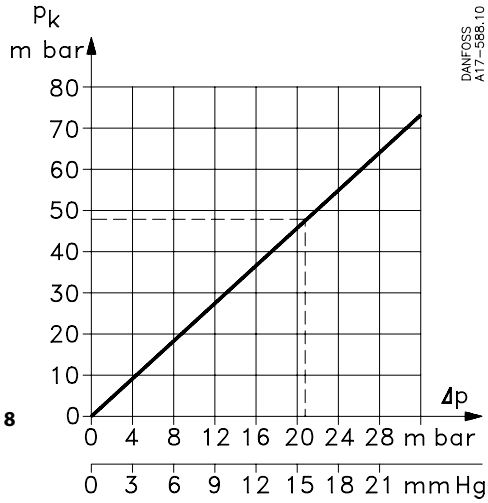

Fig. 8

Tilbehør/ Accessories/ Zubehör/ Accessoires

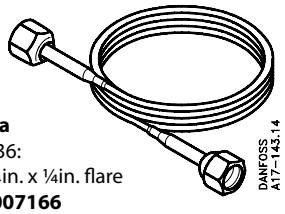

Fig. 9a
RT 6, 36:
1m, ¼in. x ¼in. flare
060-007166

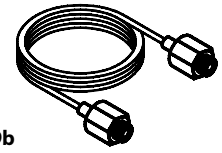

Fig. 9b
RT 6, 36
1 m, 3/8 in. x M10-0.75
060-008266

Fig. 10

Plombeskrue til dæksel/ dækhætte
Sealing screw for cover/ seal cap
Plombenschraube für Deckel/ Deckknopf
Vis de plombage pour le couvercle/ bouton capuchon
017-425166

Type/ Typ	Tæthedsgrad* Enclosure* Schutzart* Degré d'étanchéité*	Reset	Trykområde Pressure range Druckbereich Plage de pression bar	Differens (fast) Differential (fixed) Differenz (fest) Différence (fix) Δp bar	Kølemidler Refrigerants Kältemittel Réfrigérants	Till. driftstryk Max. working press. Zul. Betriebsüberdruck Press. de service max. PB/MWP - bar/psig	Max. prøvetryk Max. test press. Max. Prüfdruck Press. d'essai max. p' - bar/psig	Omgivelsestem. Ambient temp. Umgebungstemp. Temp. ambiante °C
RT 6W	IP 66	automat.	5 → 25	2.0 – 3.0	fluoreded kølemidler fluorinated refrigerants fluorierte Kältemittel réfrigérants fluorés	34/ 493	38/ 551	−50 → 70
RT 6B	IP 54	man. ext.	10 → 28	max. 1.0				
RT 6S	IP 66	man. int.						
RT 6AW	IP 66	automat.	5 → 25	2.0 – 3.0	R 717 (NH_3) + fluorerede kølemidler + fluorinated refrigerants + fluorierte Kältemittel + réfrigérants fluorés			
RT 6AB	IP 54	man. ext.	10 → 28	max. 1.5				
RT 6AS	IP 66	man. int.						
RT 30AW	IP 66	automat.	1 → 10	0.2 – 0.8		22/ 319	25/ 363	
RT 30AB	IP 54	man. ext.		max. 0.4				
RT 30AS	IP 66	man. int.						
RT 36B	IP 54	man. ext.	0 → 2.5	max. 0.2	R11, R12B1, R113, R114			
RT 36S	IP 66	man. int.						

Fig. 11

* i.h.t./ according to/ nach/ conformément à EN 60529/ IEC 529

DANSK

Pressostater
Afprøvet og godkendt af TÜV (Technischer Überwachungs Verein).
W= Druckwächter
B = Druckbegrenzer
S = Sicherheitsdruckbegrenzer

I overensstemmelse med TÜV bestemmelser vil brud på apparatets reguleringsbælg medføre, at køleanlæggets kompressor standser og vil først kunne genstartes, når pressostaten er udskiftet.
Ved brud på den ydre bælg falder apparatets brydetryk ca. 4 bar under den indstillede værdi. Apparatet afbryder således ved normalt kondensatortryk. Herved opnås fail-safe funktion.

Fælles for alle udførelser
Når trykket i anlægget overskrider den indstillede værdi, vil apparatet automatisk stoppe anlægget.

Specielt
RT6W, RT6AW, RT30AW indkobler automatisk, når trykket er faldet under den indstillede differensværdi Δp (fast).

RT6B, RT6AB, RT30AB, RT36B kan indkobles med udvendig resetknap, når trykket er faldet under den indstillede differensværdi Δp (fast).

RT6S, RT6AS, RT30AS, RT36S kan indkobles med indvendig resetknap, når trykket er faldet under den indstillede differensværdi Δp (fast).
Δp - differensværdier (fast) - i.h.t. tabel fig.11 (se også fig.5)

Tekniske data
Se fig. 11.
Kontaktbelastning: Se kontaktdækslet eller fig. 4.
Mærkningen, f.eks. 10 (4) A, 400 V ~ angiver, at der maks. må tilsluttes 10 A ohmsk og 4 A induktiv belastning ved 400 V.
Den maksimale startstrøm ved indkobling af motor (L.R.) må være op til syv gange den induktive belastning.
RT opfylder betingelserne som anført i VDE* 0660, Prüfklasse II.
*VDE = Verband Deutscher Elektrotechniker

Montering
Benyt monteringshullerne 25, Ø5 mm.
Pressostaten kan monteres på ventiltavlen eller på selve kompressoren.
Hvis apparatet kan blive udsat for vibrationer, bør det monteres på et blødt underlag. **Forekommer der trykpulsationer i anlægget på det sted, hvor pressostaten er tilsluttet, skal disse dæmpes effektivt,** f.eks. ved at tilslutte apparatet til anlægget ved hjælp af et kapillarrør. Se fig. 9.

El-tilslutning
Se fig. 6.
Kabeldiameter: 6 til 14 mm.
Jordforbindelse tilsluttes jordskruen 38.

Indstilling
Efter at dækknappen 7 er fjernet, indstilles brydetrykket med områdespindelen under samtidig aflæsning af skalaen 9.
Ved drejning af områdespindelen højre om (med uret) opnås højere brydetryk, ved drejning venstre om (mod uret) sænkes brydetrykket.

Specielt for RT36
Til anlæg, hvor udsving større end 0.1 bar fra det nominelle brydetryk ikke kan accepteres, må der foretages en finjustering, der tager hensyn til stedets middelbarometerstand pm og den øjeblikkelige barometerstand pa.
Efter denne finjustering vil apparatets brydetryk variere symmetrisk omkring det ønskede brydetryk med en størrelse, der er 2,3 gange så stor som barometerstandsafvigelsen.

Justeringseksempel
Højde over havet = 250 m
Middelbarometerstand iht. fig. 7
p_m = 984 mbar
Barometerstand i justeringsøjeblikket,
p_a = 1005 mbar
Barometerstandsforskel
Δp = 1005 mbar – 984 mbar = 21 mbar
Korrektionsværdi iht. fig. 8, p_k = 49 mbar
Ønsket brydetryk pn = 1.1 bar = 1100 mbar

Da den øjeblikkelige barometerstand p_a er højere end middelbarometerstanden p_m, skal korrektionsværdien p_k lægges til det ønskede brydetryk.

Apparatet indstilles derfor på $p_n + p_k$ = 1100 mbar + 49 mbar = 1149 mbar ~ 1.15 bar.

Tilbehør
Se fig. 9 og 10.

ENGLISH

Pressure controls
Tested and approved by TÜV (Technischer Überwachungs Verein).
W = Druckwächter (pressure control)
B = Druckbegrenzer (pressure limiter)
S = Sicherheitsdruckbegrenzer (safety pressure limiter)

In accordance with TÜV regulations, rupture of the control regulating bellows will have the effect that the refrigeration compressor stops, and cannot be restarted until the pressure control has been replaced.
If the outer bellows ruptures, the control cut-out pressure falls by approx. 4 bar below the setting. The control therefore breaks the circuit at a normal condensing pressure, resulting in fail-safe function.

Common features of all designs
When the pressure in the system exceeds the setting, the control automatically stops the system.

In particular:
RT6W, RT6AW, RT30AW cut in automatically when the pressure has fallen below the setting with Δp differential (fixed) value.
RT6B, RT6AB, RT30AB, RT36B can be reset by depressing the external reset button when the pressure has fallen below the setting with Δp differential value (fixed).
RT6S, RT6AS, RT30AS, RT36S can be reset by depressing the internal reset button when the pressure has fallen below the setting with Δp differential value (fixed).
Δp - differential values (fixed) - according to the table fig.11 (see also fig.5)

Technical data
See fig. 11.
Contact load: see switch cover or fig. 4.
E.g. marking 10 (4) A, 400 V ~ means that a max. load of 10 A ohmic and 4 A inductive may be connected on 400 V.
The max. starting current on motor cutin (L.R.) may be up to seven times the inductive load, RT complies with conditions as specified in VDE* 0660, Test Class II.
*VDE = Verband Deutscher Elektrotechniker

Fitting
Use the mounting holes 25, Ø 5 mm.
The pressure control can be mounted on the valve panel or on the compressor itself.
If the control is likely to be subject to vibration, it should be mounted on a resilient base.
If pressure pulsations occur in the system at the point where the pressure control is connected, these should be effectively damped, as for example, by connecting the RT unit to the system via capillary tubing.
See fig. 9.

Electrical connection
See fig. 6.
FASE = phase.
Cable diameter: 6 to 14 mm. Earth connection to earth terminal 38.

Setting
After removing the seal cap 7, set the cut out pressure with the uncovered range spindle while reading the scale 9.
Turning the range screw clockwise increases setting of the cut out pressure, turning it anticlockwise decreases setting of the cut out pressure.

Special to RT 36
For installations where variations greater than 0.1 bar from the rated cut out pressure cannot be accepted, fine adjustments must be made taking into account the middle barometric pressure pm and the momentary barometric pressure pa.

After the fine adjustment has been made, the cut out pressure of the unit will vary symmetrically about the required cut out pressure by an amount which is 2.3 times as large as the variation in barometric pressure.

Adjustment example
Height above sea level = 250 m
Middle barometric pressure according to fig. 7, p_m = 984 mbar
Barometric pressure at the moment of adjustment, p_a = 1005 mbar
Difference in barometric pressure
Δp = 1005 mbar – 984 mbar = 21 mbar
Correction value according to fig. 8, p_k = 49 mbar
Required cut out pressure p_n = 1.1 bar = 1100 mbar

Since the momentary barometric pressure pa is higher than the middle barometric pressure p_m, the correction value p_k must be added to the required cut out pressure.

The unit must therefore be set at $p_n + p_k$ = 1100 mbar + 49 mbar = 1149 mbar = 1.15 bar.

Accessories
See figs. 9 and 10.

DEUTSCH

Druckschalter
Von TÜV bauteilgeprüft und zugelassen
W = Druckwächter
B = Druckbegrenzer
S = Sicherheitsdruckbegrenzer

In Übereinstimmung mit den TÜV -Vorschriften bewirkt ein Bruch am Regelwellrohr des Geräts ein Ausschalten des Kompressors der Kälteanlage, wobei dieser erst nach Austausch des Druckschalters wiedereingeschaltet werden kann. Im Falle eines Bruchs am äußeren Wellrohr fällt der Ausschaltdruck des Geräts auf etwa 4 bar unter dem Einstellwert ab. Das Gerät schaltet somit beim normalen Verflüssigerdruck aus.
Dadurch wird eine störungssichere Funktion erreicht.

Gemeinsam für alle Typen
Wenn der Druck in der Anlage den eingestellten Wert überschreitet, schaltet das Gerät die Anlage automatisch aus.

Für die einzelnen Typen
RT6W, RT6AW, RT30AW schalten automatisch ein wenn der Druck unter den eingestellten Differenzwert Δp (fest) abgefallen ist.

RT6B, RT6AB, RT30AB, RT36B können mit einem aussenseitigen Resetknopf wiedereingeschaltet werden, wenn der Druck unter den eingestellten Differenzwert Δp (fest) abgefallen ist.

RT6S, RT6AS, RT30AS, RT36S können mit einem innenseitigen Resetknopf wiedereingeschaltet werden, wenn der Druck unter den eingestellten Δp (fest) abgefallen ist.
Δp - Differenzwert (fest) nach Tabelle Abb.11 (siehe auch Abb. 5)

Technische Daten
Siehe Abb. 11.
Kontaktbelastung: Siehe Kontaktdeckel oder Abb. 4.
Die Kennzeichnung, z.B. 10 (4) A, 400 V ~ gibt an, daß bei 400 V max. 10 A ohmsche und 4 A induktive Belastung angeschlossen werden dürfen.
Der beim Einschalten des Motors (L.R.) maximale Anlaßstrom darf max. den siebenfachen Wert der induktiven Belastung betragen.
RT entspricht den in VDE 0660 für Prüfklasse II gestellten Anforderungen.

Montage
Montagelöcher 25, Ø 5 mm, benutzen.
Der Druckschalter kann an der Ventiltafel oder am Kompressor selbst montiert werden. Falls das Gerät Vibration ausgesetzt werden kann, sollte es auf einer weichen Unterlage montiert werden.
Druckpulsationen an der Anschlußstelle des Druckschalters in der Anlage müssen wirksam gedämpft werden, z.B. durch Verwendung eines Kapillarrohrs zwischen zwischen Druckschalter und Anlage.
Siehe Abb. 9.

Elektrischer Anschluß
Siehe Abb. 6.
FASE = Phase.
Kabeldurchmesser: 6 bis 14 mm
Die Erdverbindung ist an die Erdungsschraube 38 anzuschliessen.

Einstellung
Deckknopf 7 entfernen und mit Hilfe der Bereichspindel unter gleichzeitigem Ablesen der Skala 9 den Ausschaltdruck einstellen.
Dreht man die Bereichsspindel nach rechts (Uhrzeigersinn) erreicht man einen höheren Ausschaltdruck. Dreht man die Bereichsspindel nach links (entgegen dem Uhrzeigersinn) wird der Ausschaltdruck gesenkt.

Speziell für RT 36
Wenn an einer Anlage Schwankungen grösser als 0,1 bar von dem Nenn-Ausschaltdruck nicht akzeptiert werden können, so muss eine Feinjustierung vorgenommen werden, wobei sowohl der mittlere Barometerstand pm als auch der augenblickliche Barometerstand p_a zu berücksichtigen ist.

Nach dieser Feinjustierung wird der Ausschaltdruck des Geräts symmetrisch um den gewünschten Ausschaltdruck variieren und zwar mit einem Wert, der das 2,3fache der Barometerstandsabweichung beträgt.

Justierungsbeispiel
Höhe über das Meer = 250 m
Mittlerer Barometerstand gemäß Abb. 7, p_m = 984 mbar
Barometerstand im Justierungsaugenblick, p_a = 1005 mbar
Barometerstandunterschied
Δp = 1005 mbar – 984 mbar = 21 mbar
Korrektionswert gemäss Abb. 8, p_k = 49 mbar Gewünschter Ausschaltdruck
p_n = 1.1 bar = 1100 mbar

Da der augenblickliche Barometerstand p_a höher als der mittlere Barometerstand p_m ist, muß der Korrektionswert p_k dem gewünschten Ausschaltdruck hinzuaddiert werden.
Das Gerät ist daher auf $p_n + p_k$ = 1100 mbar + 49 mbar = 1149 mbar ~1.15 bar einzusteilen.

Zubehör
Siehe Abb. 9 und 10.

FANÇAIS

Pressostats
Essayés et homologués par TÜV (TechnischerÜberwachungs Verein).
W = Druckwächter
B = Druckbegrenzer
S = Sicherheitsdruckbegrenzer

Conformément aux prescriptions de TÜV une rupture du soufflet de régulation de l'appareil a pour conséquence d'arrêter le compresseur de l'installation frigorifique et de ne permettre sa remise en marche qu'après remplacement du pressostat.
En cas de rupture du soufflet extérieur, la pression de déclenchement de l'appareil tombera d'env. 4 bar au-dessous de la valeur de réglage. Ainsi, l'appareil coupe le circuit à la pression de condensation normale. On obtient alors un fonctionnement de toute sécurité.

Commun pour tous les modèles
Quand la pression dans l'installation dépasse la valeur de réglage, l'appareil arrête automatiquement l'installation.

Particularités
RT6W, RT6AW, RT30AW enclenchent automatiquement quand la pression est tombée au-dessous de la valeur de réglage, différentiel Δp (fixé).
RT6B, RT6AB, RT30AB, RT36B doivent être réenclenchés à l'aide du bouton de réarmement extérieur quand la pression est descendue au-dessous de la valeur de réglage, différentiel Δp (fixé).
RT6S, RT6AS, RT30AS, RT36S doivent être réenclenchés à l'aide du bouton de réarmement intérieur quand la pression est descendue au-dessous de la valeur de réglage, différentiel Δp (fixé).
Δp - différentiel (fixé) selon la table fig. 11 (voir aussi fig. 5)

Caractéristiques techniques
Voir fig. 11.
Charge de contact: Voir le couvercle du contact ou la fig. 4.
Le marquage, p.ex.: 10 (4) A, 400 V ~, indique que, pour 400 V, il faut au max. raccorder une charge ohmique de 10 A et une charge inductive de 4A.
A l'enclenchement du moteur (L.R.), le courant de démarrage maximale peut s'élever jusqu'à 7 fois la charge inductive. RT remplit les conditions prescrites par VDE*0660, classe d'essai 11.
*VDE = Verband Deutscher Elektrotechniker

Montage
Utiliser les trous de montage 25, Ø5 mm.
Le pressostat peut être monté sur le tableau de vannes ou sur le compresseur proprement dit.
Si l'appareil est exposé à des vibrations, il doit être monté sur un support souple.
En cas de pulsations de pression dans l'installation, à l'endroit où le pressostat est raccordé, il faut les amortir efficacement, p.ex. en raccordant l'appareil à l'installation ä l'aide d'un tube capillaire.
Voir fig. 9.

Connexion électrique
Voir fig. 6.
FASE = phase; MOTOR = moteur
STOP = arrêt; START = démarrage.
Diamètre de câble: 6 à 14 mm
Raccorder la mise à la terre vis adéquate 38.

Réglage
Après enlèvement du bouton capuchon 7, régler la pression de déclenchement au moyen de la tige de gamme tout en lisant l'échelle 9.
En tournant la tige de gamme vers la droite (sens d'horloge) en augmente la pression de déclenchement - et inversement.

Particularités du RT 36
Sur les installations où un écart supérieur à 0.1 bar de la pression de déclenchement nominale ne peut pas être accepté, il faut procéder à un réglage de précision qui tient compte du niveau barométrique moyen pm et du niveau barométrique momentané p_a.

Après ce réglage de précision, la pression de déclenchement de l'appareil variera symétriquement autour de la pression de déclenchement désirée et cela dans une mesure 2.3 fois plus grande que l'écart du niveau barométrique.

Exemple de réglage
Hauteur au-dessus de la mer = 250 m
Niveau barométrique moyen conf. à la fig. 7,
p_m = 984 mbar
Niveau barométrique au moment du réglage,
p_a = 1005 mbar
Différence de niveau barométrique
Δp = 1005 mbar – 984 mbar = 21 mbar
Valeur de correction conf. à la fig. 8,
p_k = 49 mbar
Pression de déclenchement désirée
p_n = 1.1 bar = 1100 mbar

Puisque le niveau barométrique momentané p_m est supérieur au niveau, barométrique moyen p_m' il faut ajouter la valeur de correction p_k à la pression de déclenchement désirée.

L'appareil doit donc être réglé sur $p_n + p_k$ = 1100 mbar + 49 mbar = 1149 mbar = 1.15 bar.

Accessoires
Voir fig. 9 et 10.

Instructions

060R9768

KPU Dual Pressure Controls

060R9768

Application

KPU dual pressure controls are for use on commercial refrigeration and air conditioning systems to protect compressor against excessively low suction pressure or excessively high discharge pressure.
KPU dual pressure controls are compatible with non aggressive fluorinated refrigerants. Standard enclosure is NEMA1.

KPU dual pressure controls are fitted with the Single-Pole, Single-Throw (SPST) or Single-Pole Double-Throw (SPDT) switches, suitable for direct as well as indirect (with a contactor) control.
Three versions of switch operation are available:
- automatic on LP and HP sides
- automatic on LP and manual reset on HP
- convertible manual or automatic on LP and HP sides.

Manual reset

The manual reset mechanism does not allow the pressure control to automatically reset after the control has cut out. So the pressure control must be manually reset by the user to enable restart of the equipment. Manual reset is possible to operate only after return of pressure to cut in level. Before releasing the reset it is recommended to investigate what caused the shutdown.

Convertible reset

The convertible reset feature allows to change the operation from automatic to manual by turning the selecting plate.
The selecting plate is located between two push buttons at the top of the control.
Before changing position of the plate, loosen the screw on it.
After the selecting plate is positioned in desired reset configuration, the screw must be tightened again.

Product Specification

Type	Code no.		Low pressure (LP)		High pressure (HP)		Reset		Contact system
	¼″ male flare	36″ cap. tube w. ¼″ flare nut	Regulating range psig	Differential Δp psi	Regulating range psig	Differential Δp psi	Low pressure	High pressure	
KPU 15	**060-5247**	**060-5248**	6″ to 108	10 to 60	100 to 465	60 fixed	Automatic	Automatic	SPST (NO + NC)
KPU 15B	**060-5249**	**060-5250**			100 to 465		Automatic	Manual	
KPU 16W	**060-5251**	**060-5252**			100 to 600		Automatic	Automatic	SPDT with LP/HP signal
KPU 16B	**060-5253**	**060-5254**			100 to 600		Convertible	Convertible	

Max. working pressure: LP side - 250 psig, HP side KPU15 - 510 psig, HP side KPU16 - 675 psig
Max. test pressure: LP side - 290 psig, HP side KPU15 - 530 psig, HP side KPU16 - 725 psig

Ambient temperature: -40 to 122°F (170 for max. 2 hours)

Convertible reset:
Selection of reset function on dual pressure controls with convertible reset - turn plate to desired reset configuration

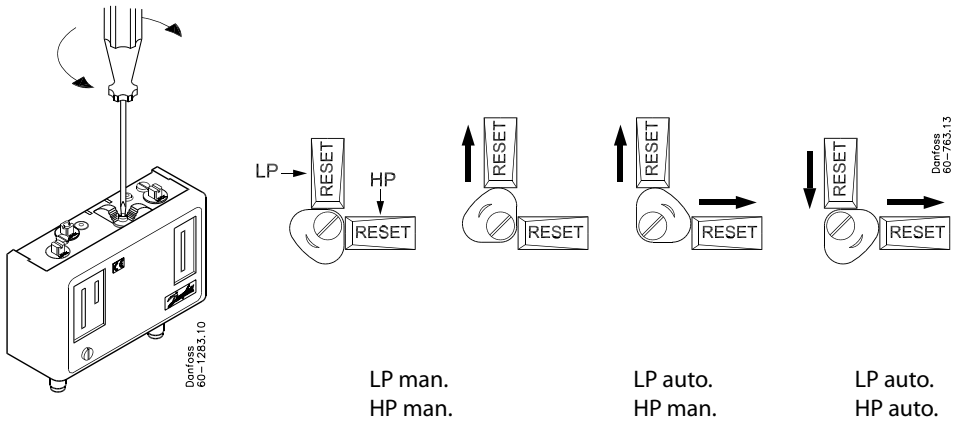

LP man. HP man. | LP auto. HP man. | LP auto. HP auto. | LP man. HP auto

Installation

Select an accessible location, where the control and pressure connection line will not be subject to damage.

IMPORTANT:
Mount the pressure control in a position that will allow drainage of liquids away from control bellows. Pressure connection of the control must always be located on the top side of the refrigerant line. This reduces the possibility of oil, liquids, or sediment collecting in the bellows, which could cause the control malfunction.

IMPORTANT:
Ensure the ambient temperature for the pressure control is higher than the refrigeration line as that will prevent liquid migration and accumulation in the bellows.

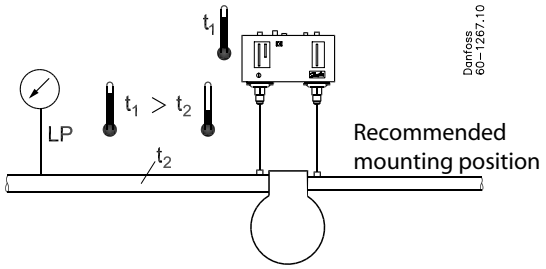

Mount the KPU pressure control on a bracket or on a completely flat surface. Mounting to an uneven surface might cause improper control operation.

For bracket mounting use only the 10-32x3/16 screws provided with the control. If other screws are used, function of the pressure control might be disturbed (they should not protrude into the control more than 1/8").

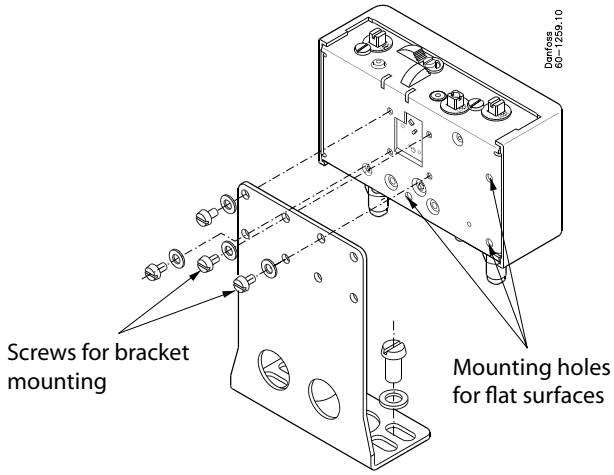

Use only the mounting holes provided; no other holes are to be added to the control

IMPORTANT:
Pressure pulsations in the refrigeration system reduce life time of the bellows and might disturb switch function. Pressure pulsations should always be effectively damped e.g. by connection the pressure controls to the refrigeration system through a capillary tube.

Recommendations for capillary tube and flare connections:

1) Ensure self-draining of the capillary tube to minimize clogging.

2) Coil excess capillary tube into smooth, circular coils (approx. 3 in. diameter). The coiled tube should be securely fastened in order to prevent possible damage due to vibration.

3) Leave a little slack in the capillary tube as it helps to damp mechanical vibrations.

4) Avoid sharp bends as well as re-bending of the capillary tube on the same point as it weakens the material, increasing the risk of crack.

5) Never allow for contact between the capillary tube and sharp or abrasive objects as during vibrations the tube could be damaged due to friction.

6) Purge the piping before connecting pressure controls.

7) Always use two wrenches tightening the flare nut on the pressure control. One wrench should support the connector while the second wrench is used to tighten the nut.

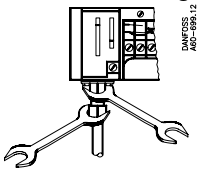

8) Do not over tighten flare nuts as it may damage the threads causing leaks.

9) Protect the capillary tube from damage caused by vibrations from compressor:
- when the control unit is mounted directly on the compressor, the capillary must be secured to the compressor so that everything vibrates as a whole.
-when the control is mounted remote from the compressor, make the pressure connections away from the compressor.
- when the control is mounted remote from the compressor and the pressure connections have to be on the compressor, then damping coils must be used between the compressor and the pressure control.

NOTE:
After installing the pressure control, evacuate the plant in accordance with applicable EPA and other regulations, to remove air, moisture, and other contaminants.

Wiring Option A:
- KPU 15 Pressure Control (SPST (NO + NC))

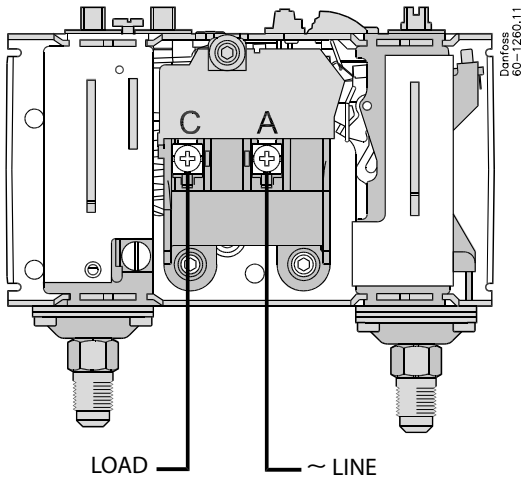

Wiring Option B:
- KPU 16 Pressure Control (SPDT with LP/HP signal)

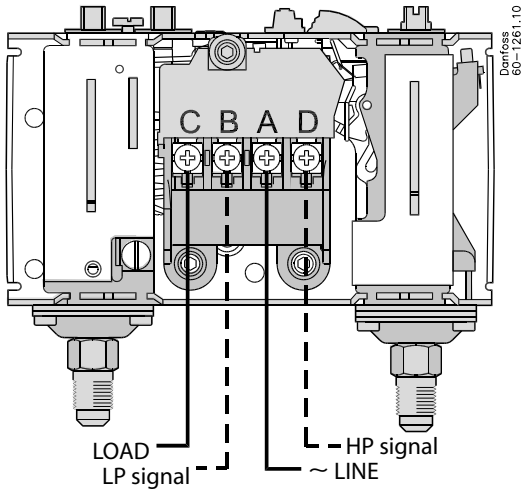

Wiring

CAUTION:
Disconnect power supply before wiring connections are made to avoid possible electrical shock or damage to equipment.
Do never touch live parts with your fingers or with any tool.

NOTE:
All wiring should conform to the National Electrical Code and local regulations.
Use copper wire only.
Use terminal screws furnished in the contact block.
Do not exceed tightening torque 20 lb. in (2.3 Nm).
Do not exceed electrical ratings for the control.

Electrical ratings according to UL regulations

Contacts	Motor ratings	120 V	240 V
A - B	AC FLA	24	24
A - C	AC LRA make only	144	144
	AC NIA	24	24
	Pilot Duty 12 W, 120/240 V DC		
A - D	Pilot Duty 50 VA, 240 V AC		

European electrical ratings according to EN 60947

AC1	AC3	AC15	LR	DC13
16 A	16 A	10 A	112 A	12 W
400 V				220 V

The terminal block as well as grounding screw are accessible after dismounting of the front cover.

Wire dimensions: 10 AWG max.
Cable entry: 7/8" cable entry for ½" male pipe thread connection (conduit boss) or similar (Pg13.5 or Pg16) screwed cable entry.

Contact function test (Manual trip)

When the electrical leads are connected the contact function can be manually tested regardless of pressure conditions in the system. For LP side testing use the trip lever located in the left side of the dual KPU. The lever must be operated with fingers only. Do not use screwdriver as it will damage the control.
For HP side testing use lever located at bottom of right side of the dual KPU. The lever must be carefully operated with a screwdriver.

NOTE:
While operating the manual trip on KPU controls with manual reset it is necessary to push the reset knob.

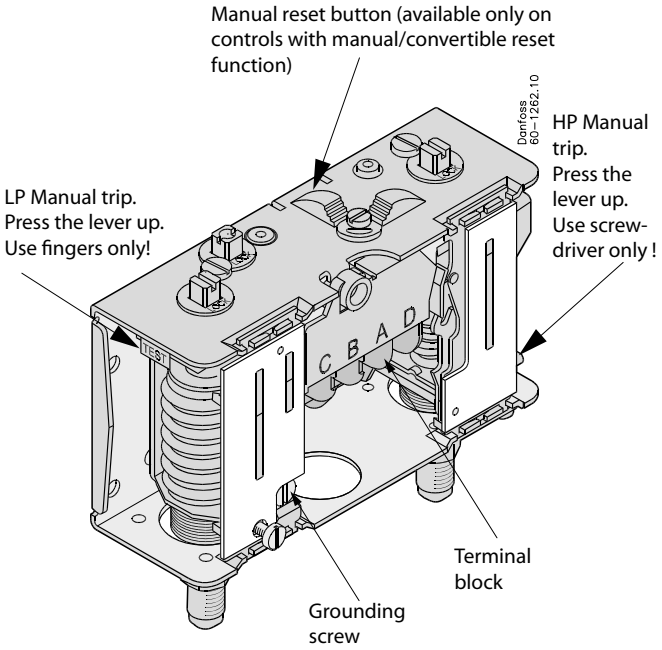

RI5AS222

Adjustment

NOTE:
Adjust the pressure control with settings specified by the manufacturer of the controlled equipment.
Do not exceed the pressure ratings of the controlled equipment or any of its components when checking pressure control operation or operating the controlled equipment.
Do not adjust pointers beyond the highest or lowest indicator marks on the scale plate, as this may cause inaccurate control operation.

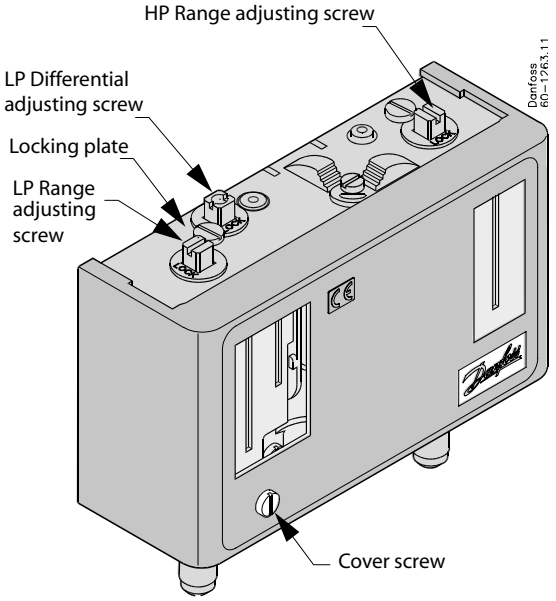

Before adjustment, loosen the locking plate.
For setting use the Universal Refrigeration Wrench.

Set Cut In/ Cut Out by adjusting range screw:
- On LP Side turn the range screw clockwise to lower the Cut In.
- On HP Side turn the range screw clockwise to rise the Cut Out.

Set differential by adjusting differential screw:
- On LP Side turn the differential screw clockwise to increase the differential.

IMPORTANT:
The scale plate is only for reference and for more precise setting a pressure gauge should be used.

IMPORTANT:
After installing and adjusting pressure control run the controlled equipment several times (at least three cycles) at normal operating conditions.

Low Pressure Side Setting
Cut Out on pressure fall.

Scale plate directly indicates the Cut In and the Differential set points.

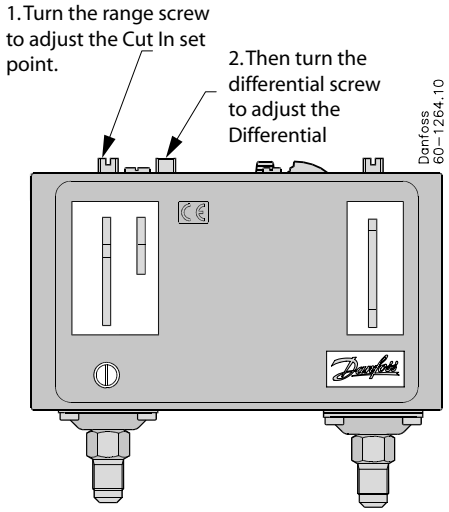

3. The Cut Out setting equals the Cut In less the Differential:
CUT OUT = CUT IN - DIFFERENTIAL

NOTE:
Cut Out set point must be above absolute vacuum! If the Differential is set too high then the control will not stop the compressor.

High Pressure Side Setting
Cut Out on pressure rise.

Scale plate directly indicates the Cut Out set point.
There is no pointer for the Differential.
The Differential pressure value is fixed and printed on the scale plate.

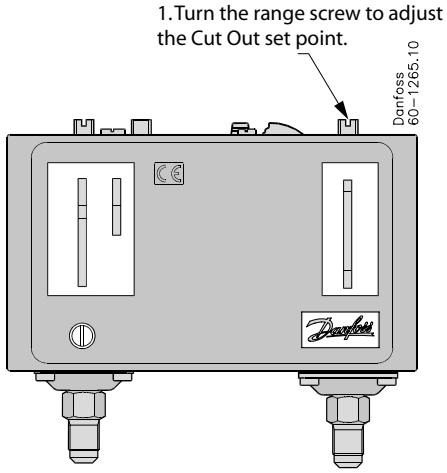

2. The Cut In setting equals the Cut Out less the Differential:
CUT IN = CUT OUT - 60 psi

©Danfoss A/S, IC-MC-mr, 01-2005

Instructions

060R9769

KPU Temperature Controls

060R9769

Application

KPU temperature controls are used for regulation and to ensure safety in refrigeration, freezing, air conditioning, ventilating and heating systems.
KPU temperature controls are available with vapor charge or with adsorption charge.
All KPU temperature controls are fitted with Single-Pole Double-Throw (SPDT) switches.

For large ac motors and for all dc motors, KPU is installed in the control circuit. For single phase ac motors, KPU is installed in the line voltage supply to the motor.

The standard KPU enclosure is rated NEMA 1. NEMA 2 is obtained when the control is mounted on a flat surface. When mounting KPU on a bracket, cover all unused holes.

Product Specification

Charge	Type	**Code no.**	Bulb type	Capillary tube length [in.]	Reset function	Regulating range [F°]	Differential Δt [°F]	Max. bulb temperature [°F]	Ambient temperature [°F]
Vapor	KPU 61	**060L5201**	A	80	auto.	−20 → 60	4 → 18**	250	−40→122 (170 for max. 2 hours)
	KPU 61	**060L5202**	A	200	auto.	−20 → 60	4 → 18**		
	KPU 61	**060L5203**	B	80	auto.	−20 → 60	4 → 18**		
	KPU 61B	**060L5204**	B	80	man. (MIN)*	−20 → 60	5 (fixed)**		
	KPU 61B	**060L5205**	B	200	man. (MIN)*	−20 → 60	5 (fixed)**		
	KPU 61	**060L5210**	B	80	auto.	−20 → 60	4 → 18**		
	KPU 62	**060L5206**	C1	0	auto.	−20 → 60	4 → 18**		
	KPU 63	**060L5213**	A	80	auto.	−60 → 15	10 → 25**		
	KPU 63	**060L5214**	B	80	auto.	−60 → 15	10 → 25**		
	KPU 68	**060L5215**	C1	0	auto.	25 → 95	5 → 22**		
	KPU 69	**060L5217**	B	80	auto.	25 → 95	5 → 22**		
Adsorption	KPU 62	**060L5207**	C2	0	auto.	−20 → 60	4 → 15	175	
	KPU 73	**060L5208**	E3	80	auto.	−15 → 60	5 → 35		
	KPU 73	**060L5209**	E1	80	auto.	−15 → 60	15 → 45		
	KPU 73B	**060L5211**	E3	80	man. (MIN)*	−15 → 60	6 (fixed)		
	KPU 73	**060L5212**	D	80	auto.	−15 → 60	5 → 35		
	KPU 71	**060L5218**	E2	80	auto.	25 → 70	5 → 18		
	KPU 71B	**060L5216**	E2	80	man. (MIN)*	25 → 70	5 (fixed)		
	KPU 74	**060L5219**	E1	80	auto.	0 → 80	9 → 35		
	KPU 74B	**060L5220**	E1	80	man. (MIN)*	0 → 80	10 (fixed)		
	KPU 75	**060L5221**	F	80	auto.	30 → 95	5 → 18	230	
	KPU 75	**060L5222**	E2	80	auto.	30 → 95	5 → 18		
	KPU 77	**060L5223**	E3	80	auto.	60 → 140	6 → 18	265	

* man.(MIN): Manual reset after cut-out on falling temperature
** The switch differential is dependent on range settings. Low range settings increases the differential. High range settings decreases the differential. Use the graphs on page 3 to determine the correct differential setting.

Thermostat bulb types

A	B	C	D	E	F
straight capillary tube	remote air coil	air coil/ room sensor	double contact remote coil	remote bulb	remote duct coil

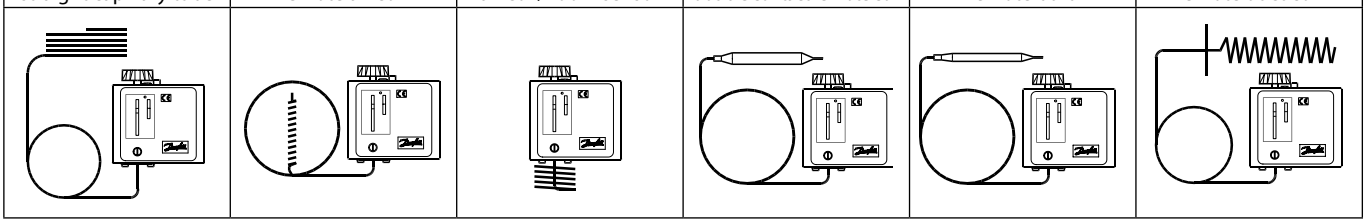

Installation

Select an accessible location, where the control will not be subject to damage.

Mount the KPU on a bracket or on a completely flat surface. Mounting on an uneven surface may cause incorrect control operation.
For bracket mounting, use only the 10-32 x 3/16 inch screws furnished with the control. Other screws may interfere with the functioning of the control. In no case can screws protrude more than 1/8" into the control.

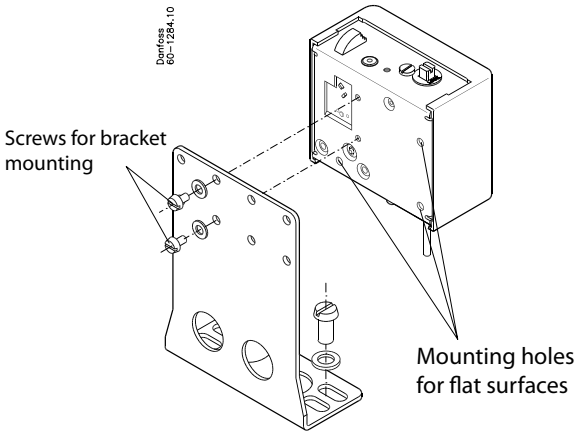

Use only the mounting holes provided. Do not make additional holes.

IMPORTANT:
For vapor charged temperature controls, ensure that the bulb is installed in a colder location than the control housing and capillary tube. This prevents charge migration from the bulb and ambient temperature will have no effect on regulation accuracy.

For adsorption charged temperature controls, the bulb can be placed in a warmer or colder location than the control housing and capillary tube.

General recommendations for capillary tube and bulb installation:

1) Protect the capillary tube from damage due to vibration.
   a.When the control unit is mounted directly on the compressor, the capillary tube must be secured to the compressor so that both vibrate together.
   b.For mounting otherwise, form surplus capillary tube into a loose loop, and secure the length of capillary tube between the compressor and the loop to the compressor. Secure the length from the loop to the thermostat to the base on which the thermostat is mounted.
2) Leave a little slack in the capillary tube to help dampen vibration.
3) Avoid sharp bends and bending the capillary tube at the same point several times, as these actions can weaken the material and increase the likelihood of the tube cracking
4) Form and locate the capillary tube away from sharp or abrasive objects that might damage it.
5) Never allow the capillary tube of a vapor charged temperature control to run alongside of a suction line in a wall entry.
6) Ensure minimal length of capillary tube exposed to temperature for KPU with straight capillary bulb type:
   –16 in. for KPU temperature controls with 80 in. capillary tube
   –22 in. for KPU temperature controls with 200 in. capillary tube

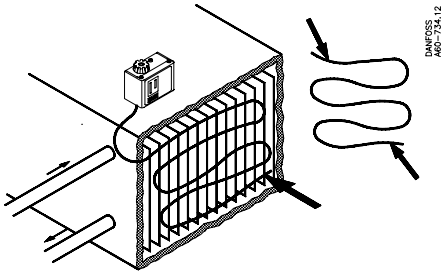

7) For temperature controls with room sensor coils, make sure that placement allows free airflow around the coil and bulb. At the same time, ensure that the bulb is not exposed to drafts from doors, or to heat radiated from the evaporator surface.
   Make sure that the bulb does not come into contact with a wall surface.
   Never mount the temperature control directly on a cold wall. Instead, mount the unit on an insulating plate.

IMPORTANT:
Do not dent or deform the bulb of the temperature control, as doing so could damage the bulb and cause charge leakage.

Wiring

The terminal block as well as grounding screw are accessible after dismounting the front cover.

CAUTION:
To avoid the possibility of electric shock and damage to equipment, diconnect the power supply before any wiring connections are made.
Never touch current conducting (LIVE) parts with your fingers or with tools.

NOTE:
All wiring should conform to the National Electrical Code and to applicable local regulations.
Use only copper wire.
Use only the terminal screws furnished in the terminal block.
Do not exceed tightening torque of 20 inch pounds (2.3 Nm).
Do not exceed the control's specified electrical ratings.

Electrical ratings according to UL regulations

120 V a.c.	24 FLA, 144 LRA - make only
240 V a.c.	24 FLA, 144 LRA - make only
240 V d.c.	12 W pilot duty

European electrical ratings according to EN 60947

AC1	AC3	AC15	LR	DC13
16 A	16 A	10A	112 A	12 W
400 V				220 V

Wiring Option A: Cut-Out on temperature fall

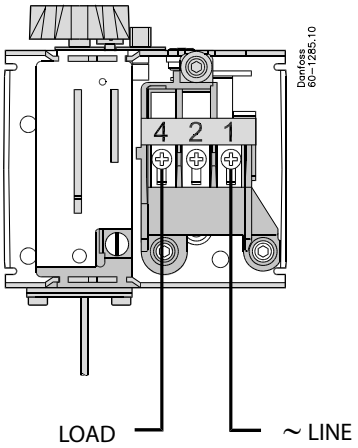

Wiring Option B: Cut-Out on temperature rise

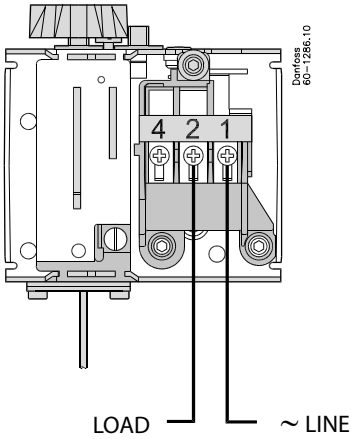

Wire dimensions: 10 AWG max.
Cable entry: 7/8" cable entry for ½" male pipe thread connection (conduit boss) or similar (Pg13.5 or Pg16) screwed cable entry.

Contact function test (Manual trip)

When the electrical leads are connected the contact function can be manually tested regardless of temperature conditions in the system.
The manual trip lever is located in the left side of the KPU. It must be operated with fingers only. Do not use screwdriver as it will damage the control.

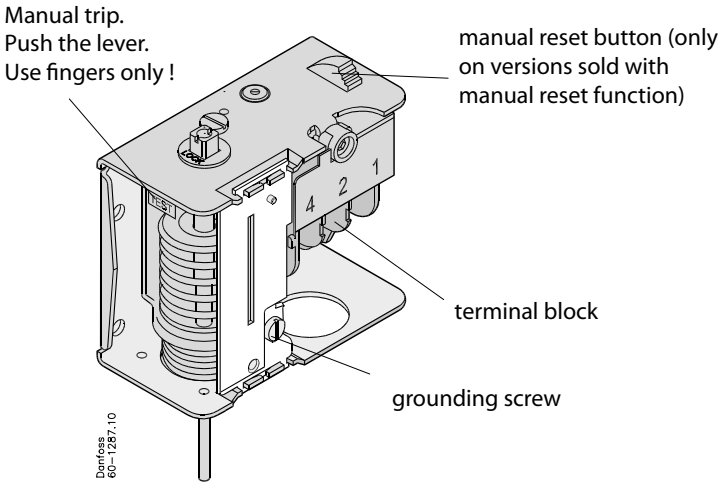

NOTE:
While operating the manual trip on KPU controls with manual reset it is necessary to push the reset knob.

Determination of differential

For KPU controls with vapor charge and automatic reset, use the following graphs to determine the correct differential.

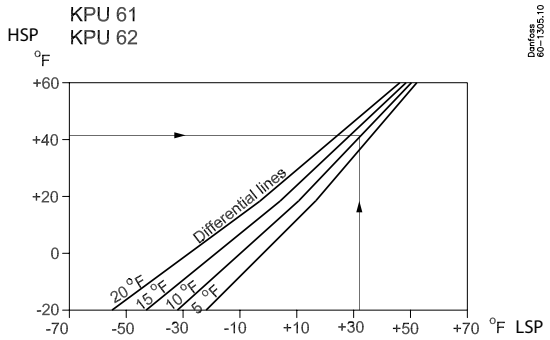

Example:
HSP = +45°F
LSP = +32°F => DIFF (from graph): 13°F (value which has to be set on diff. scale)

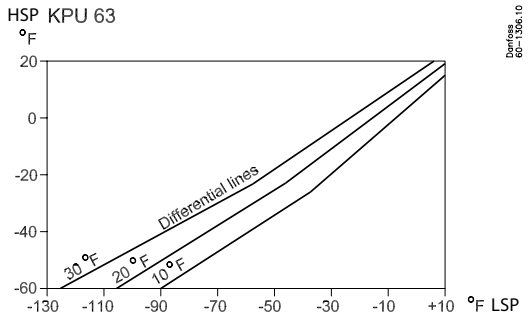

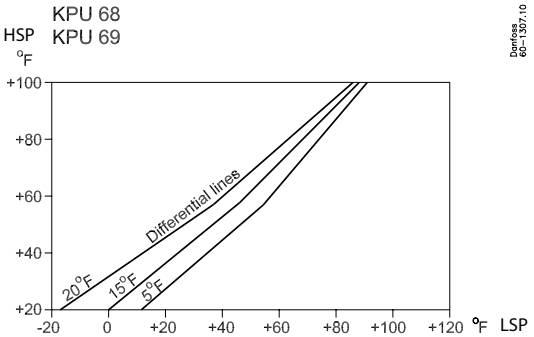

DKRCCPICD0A122

Adjustment

NOTE:
Adjust the temperature control to settings specified by the manufacturer of the controlled equipment. When checking temperature control operation, or operating the controlled equipment, do not exceed the manufacturer's temperature ratings for the controlled equipment or for any of its components.
To avoid inaccurate control operation, do not adjust the KPU's pointers beyond the highest or lowest indicator marks on the scale plate.

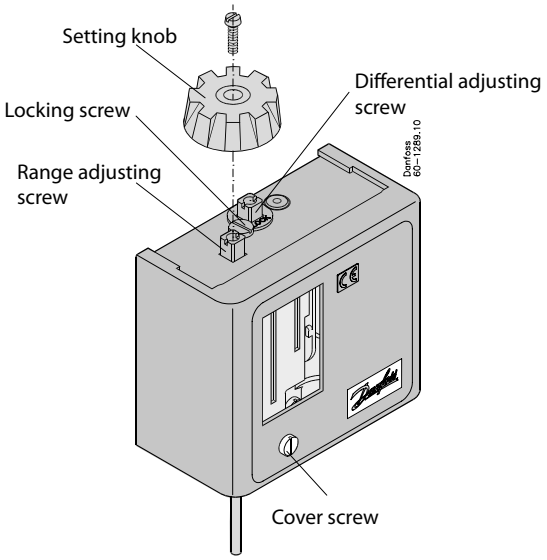

Before adjustment loosen the locking screw.
For setting use Universal Refrigeration Wrench or the setting knob, if available.
Movement of the setting knob is limited by the locking screw, which allows only small corrections to the settings. Therefore, if the setting knob is to be used for adjustments, completely remove the locking screw. After adjustment, tighten the locking screw.

Adjustment: Temperature Control with automatic reset

Scale plate directly indicates High Switching Point and Differential.

1. Set High Switching Point by adjusting range screw. Turn the screw clockwise to lower the set point.

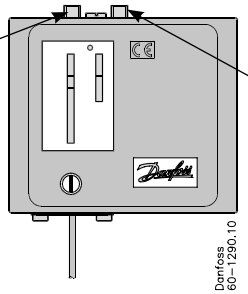

2. Then set Differential by adjusting differential screw. Turn the screw clockwise to increase Differential.

3. Low Switching Point is equal to High Switching Point less Differential: LOW = HIGH - DIFFERENTIAL

Adjustment: Temperature Control with manual reset

Scale plate directly indicates Low Switching Point, which is Cut-Out. There is no pointer for Differential.
Differential value is fixed and printed on the scale plate.

1. Set Cut-Out (Low Switching Point) by adjusting range screw. Turn the screw clockwise to lower the set point.

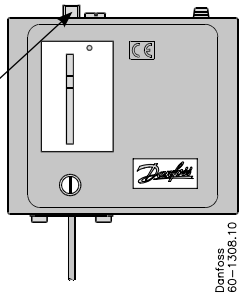

2. High Switching Point (Cut-In) equals Low Switching Point (Cut-Out) plus Differential:
CUT IN = CUT OUT + DIFFERENTIAL

IMPORTANT:
The scale plate is only for reference and for more precise setting a temperature gauge should be used.

IMPORTANT:
After installing and adjusting the temperature control, check your settings by running the controlled equipment several times (at least three times) under normal operating conditions.

Manual switch

Available only on KPU61 (060L5210) and KPU62 (060L5207), the manual switch is a two-position switch used to shut down the refrigeration system. The two positions are:
1) AUTO: position for automatic operation
2) STOP: contacts 1 and 2 are locked in the closed position.

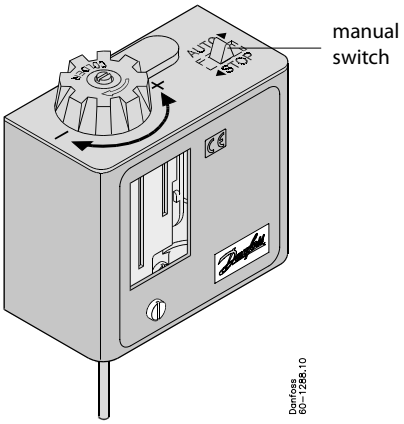

CAUTION:
The manual switch only stops automatic operation, and can only be used for service on non-electrical parts. Interrupt mains power before servicing electrical parts.

©Danfoss A/S, IC-MC-mr, 11-2005

Instructions

060R9750

Pressure Controls
KP1, KP1W, KP1A, KP2, KP5, KP5A, KP6W, KP6B, KP6S, KP6AW, KP6AB, KP6AS, KP7W, KP7B, KP7S

KP 1, 2, 5, 7: HFC, HCFC, CFC
KP 6: HFC, HCFC, CFC, CO_2
KP 1A, 5A, 6A: R 717 (NH_2)

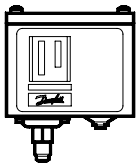

KP 1, 2, 5, 6, 7

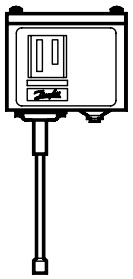

KP 1, 2, 5, 6, 7

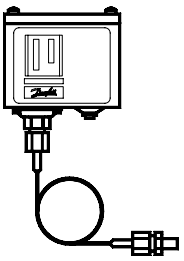

KP 1A, 5A

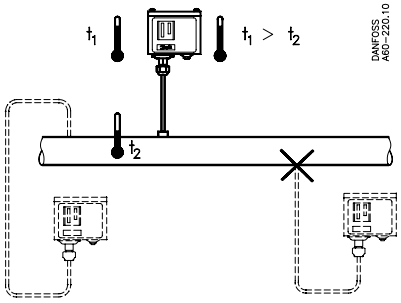

t1 min. KP 1,2,5 : -40C (-40F)
t1 min. KP 6,7 : -25C (-13F)
t1 max. : 65C (150F)

Relative humidity RH: 30 to 98%
vibrations resistance: 4g (10-1000 Hz)

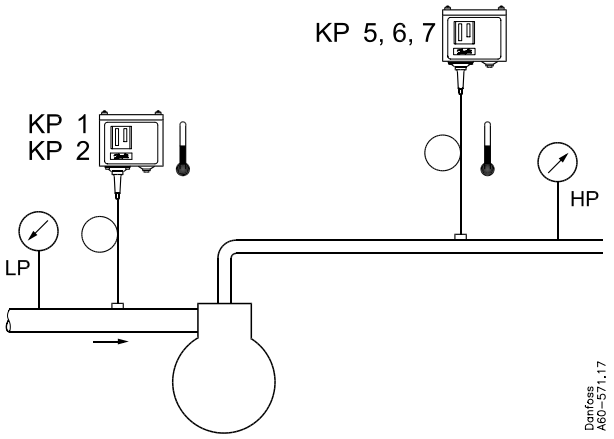

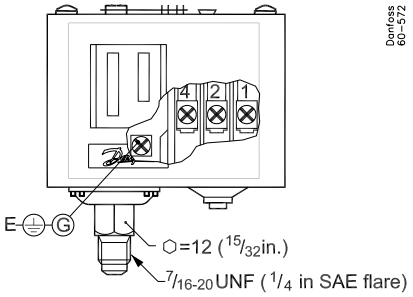

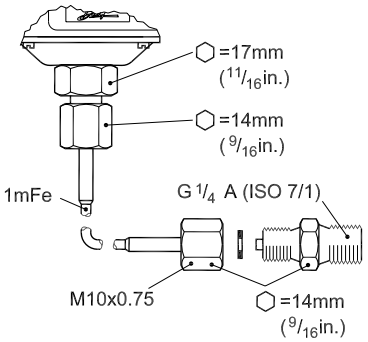

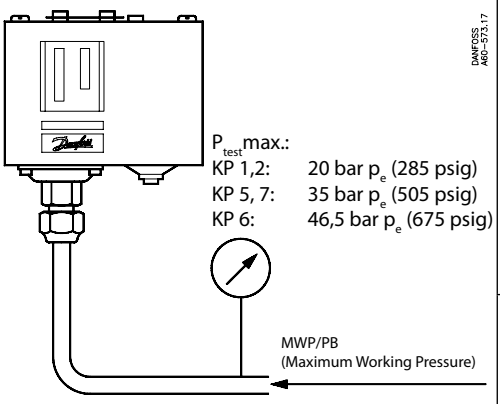

Type	Range	MWP/PB
KP 1	–0.2 → 7.5 bar	250 psi / 17 bar
KP 1, reset	–0.9 → 7 bar	250 psi / 17 bar
KP 1W	0.5 → 3 bar	250 psi / 17 bar
KP 2	–0.2 → 5 bar	250 psi / 17 bar
KP 5	8 → 32 bar	505 psi / 35 bar
KP 6	8 → 42 bar	675 psi / 46.5 bar
KP 7	8 → 32 bar	505 psi / 35 bar

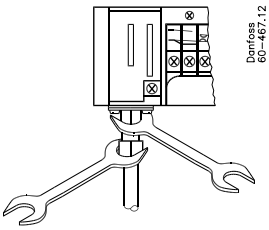

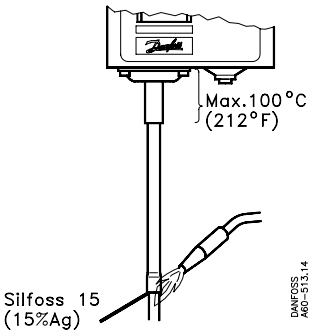

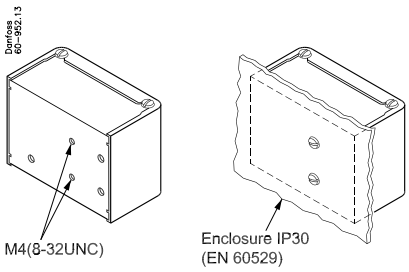

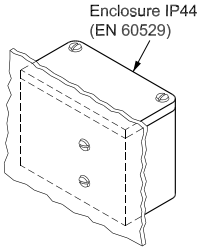

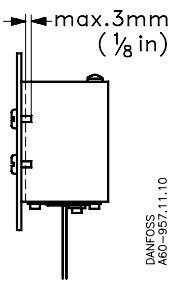

DKRCCPICA0A300-520H1366

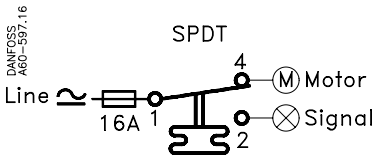

Contact 1-4 opens on pressure drop

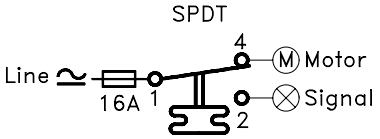

Contact 1-4 opens on pressure drop

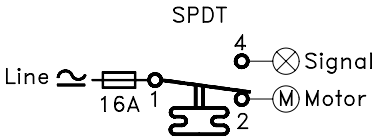

Contact 1-2 opens on pressure rise

KP1,2

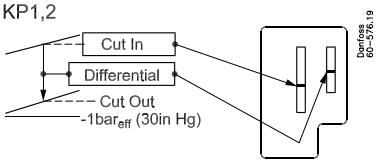

KP1W, KP1 manual reset

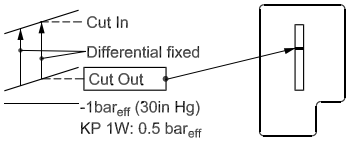

KP5, 5A,6,6A,7

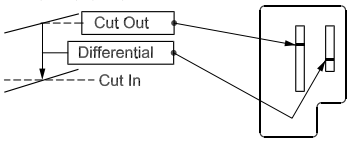

Electrical rating - General

LR 112A	AC 1: 16A AC 3: 16A AC 15: 10A	400 V ≃	DC 13 12 W 220 V⎓

Short circuit protection: Fuse 16 Amp.

When used acc. to UL regulations

c UL us Listed refrigeration controller 61B5

Voltage AC	Voltage DC	FL A	LR A	Resist. load	Pilot duty
240		8	48	8A	3A
120		16	96	16A	
	240				12W

Use copper wire only
Tightening torque 20lb. in.

Automatic reset

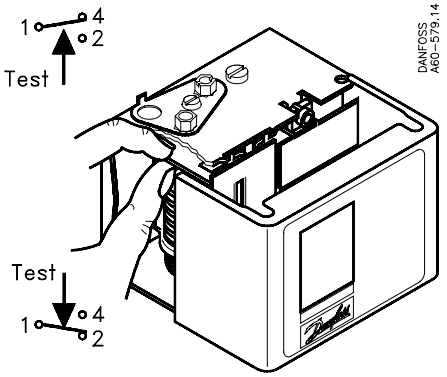

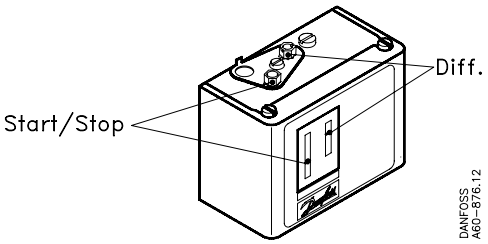

Manual reset

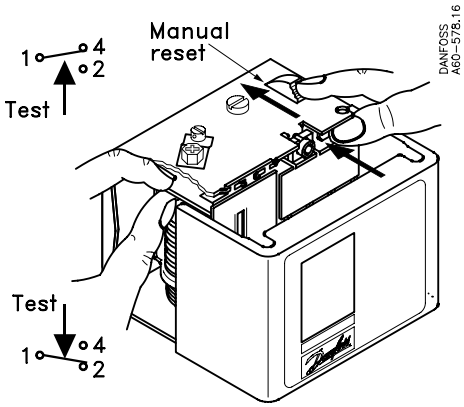

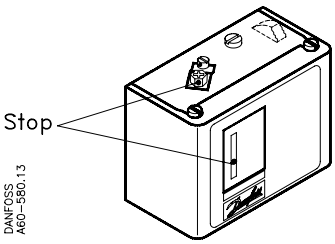

Diff.

KP 1, 1A:	0.7 bar (10 psi)
KP 5, 5A:	3 bar (43 psi)
KP 6B, 6S, 6AB, 6AS, 7B, 7S:	4 bar (58 psi)

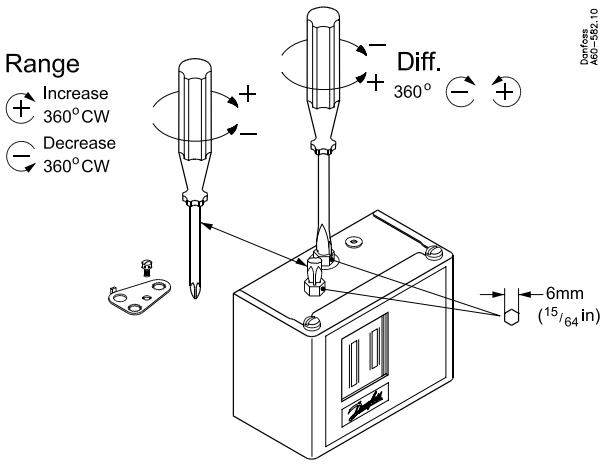

©Danfoss A/S 04-2006 (AC-DSL/mr)

INSTRUCTIONS

KP 1, KP 2, KP 5, KP 7W, KP 7B

060R9746

Types

The controls can be used with CFC, HFC and HCFC refrigerants.

CAUTION: Do not install these controls on ammonia systems.

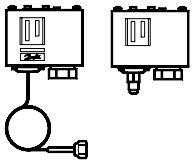

Auto reset: KP 1, KP 2, KP 5, KP 7W

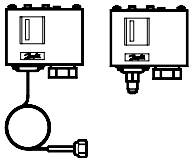

Manual reset: KP 1, KP 5, KP 7B

Mounting requirements

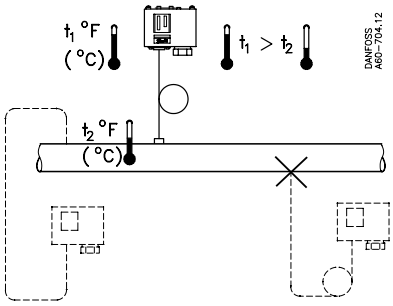

CAUTION: Do not mount the control in a position where dirt, sediment, or oil will affect the operation of the control.

Ambient temperatures

t_1 min.	KP 1, 2, 5:	–40°F (–40°C)
	KP 7:	–13°F (–25°C)
t_1 max.		150°F (65°C)

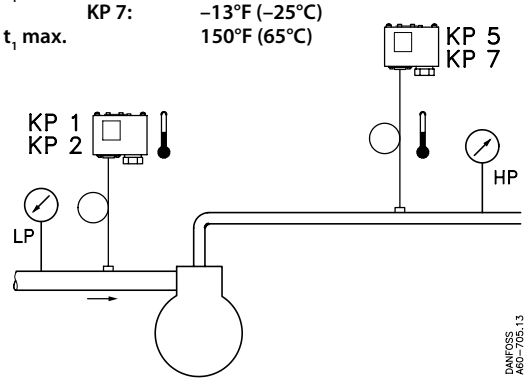

Test pressure (p_{TEST})

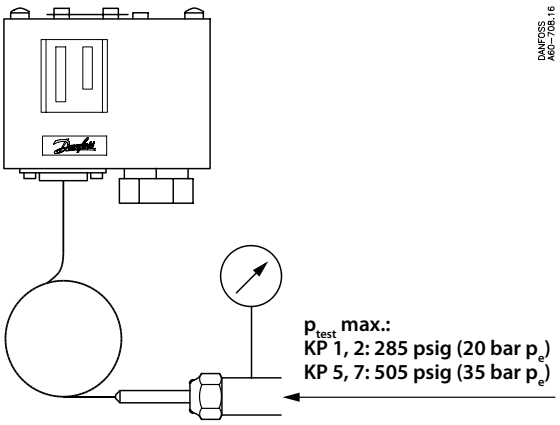

Connections

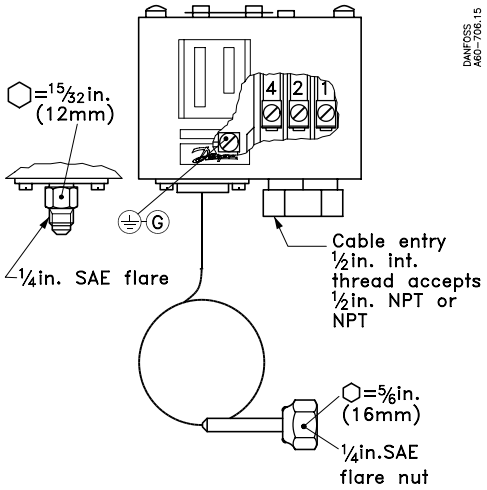

Enclosure

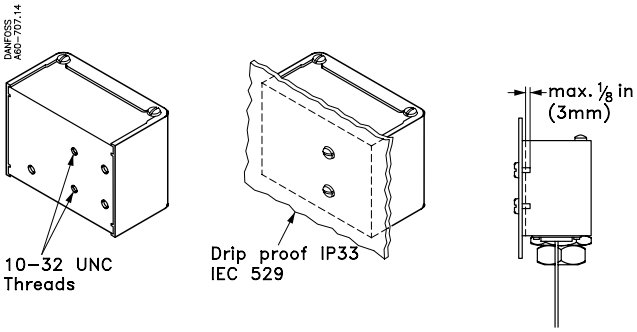

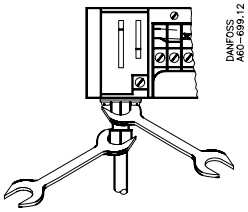

CAUTION: The mounting panel must be plane to avoid damage of control.

© Danfoss A/S

Wiring

CAUTION: Disconnect power supply before wiring connections are made to avoid possible electrical shock or damage to equipment.
All wiring should conform to the National Electrical Code and local regulations.

Terminal block

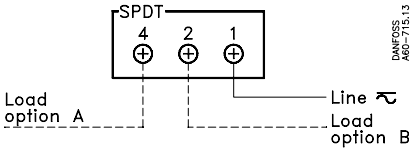

CAUTION: Use terminal screws furnished in the contact block.
Use tightening torque 20 lb. in (2.3 Nm).
Use copper wire only.

Contact load ratings

120 V a.c.	16 FLA, 96 LRA
240 V a.c.	8 FLA, 48 LRA
240 V d.c.	12 W pilot duty

Load Option A

CUT-OUT on pressure drop
Wire terminals 1-4:
CUT-IN = High Set Point (HSP)
see "Setting"
CUT-OUT = Low Set Point (LSP)
see "Setting"

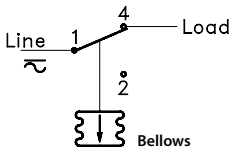

Terms 1-4 close on pressure rise
Terms 1-4 open on pressure drop

Example:	**CUT-IN**	**= 30 psig**	
	CUT-OUT	**= 10 psig**	
This means	**CUT-IN**	**= HSP**	**= 30 psig**
	CUT-OUT	**= LSP**	**= 10 psig**

Note:
= Bellows movement on pressure rise
¬ = Bellows movement on pressure drop
The free terminal can be used for signal purpose.

Load Option B

CUT-OUT on pressure rise
Wire terminals 1-2:
CUT-IN = Low Set Point (LSP)
see "Setting"
CUT-OUT = High Set Point (HSP)
see "Setting"

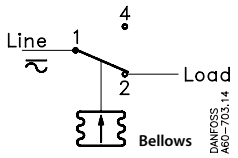

Terms 1-2 close on pressure drop
Terms 1-2 open on pressure rise

Example:	**CUT-IN**	**= 250 psig**	
	CUT-OUT	**= 350 psig**	
This means	**CUT-IN**	**= LSP**	**= 250 psig**
	CUT-OUT	**= HSP**	**= 350 psig**

Electrical contacts/wiring test

TRIP (main lever)
use FINGERS ONLY!
(Do NOT use screwdriver)

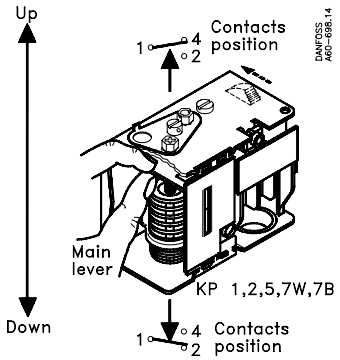

Note:
KP 1, KP 5 and KP 7B w/man. reset:
Push manual reset knob during manual tripping.

Manual reset

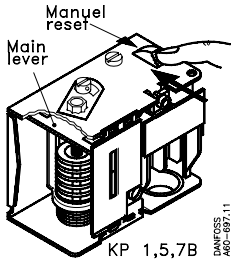

To resume control operation after safety cutout, push reset knob as indicated.

Note:
KP 1, man. reset is possible only after a pressure rise of 10 psi (0.7 bar).
KP 5 and KP 7B, man. reset is possible only after a pressure drop of respectively 43 psi (3.0 bar) and 58 psi (4.0 bar)

Adjustment spindle(s) location

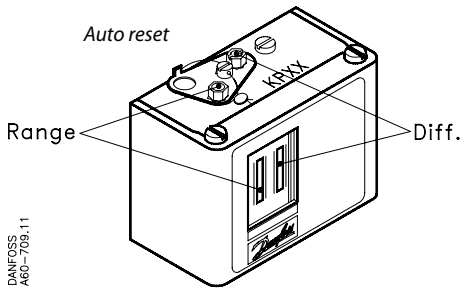

KP 1, 2, 5, 7W

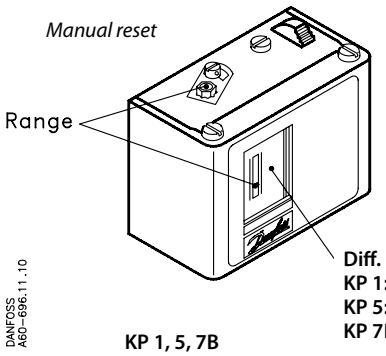

KP 1, 5, 7B

Diff.	**(fixed)**
KP 1:	**10 psi (0.7 bar**
KP 5:	**43 psi (3 bar)**
KP 7B:	**58 psi (4 bar)**

RI.5A.J1.22 © Danfoss A/S

Setting
(se also "Wiring")

KP 1 (auto reset), KP 2, KP 5, KP 7W and KP 7B

1. **Adjust range spindle to desired HIGH SET POINT (HSP)**
2. **Adjust differential spindle to desired DIFFERENTIAL (DIFF.)**

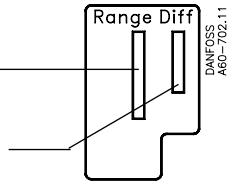

Note:
KP 5 (manual reset) and KP 7B have fixed diff.
Value printed on scale plate.

HIGH SET POINT minus DIFFERENTIAL equals LOW SET POINT

Example:

HSP	**–**	**DIFF.**	**=**	**LSP**
30 psig	**–**	**20 psi**	**=**	**10 psig**
(2.1 bar)		**(1.4 bar)**		**(0.7 bar)**

If terminals 1-4 are used:	**CUT-IN**	**= HSP**
	CUT-OUT	**= LSP**
If terminals 1-2 are used:	**CUT-IN**	**= LSP**
	CUT-OUT	**= HSP**

KP 1 (manual reset ONLY)

1. **Adjust range spindle to desired LOW SET POINT (LSP)**
2. **DIFFERENTIAL is fixed. Value printed on scale plate**

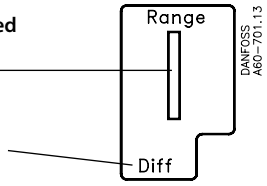

LOW SET POINT plus DIFFERENTIAL equals HIGH SET POINT

Example:

LSP	**+**	**DIFF.**	**=**	**HSP**
12 psig	**+**	**10 psi**	**=**	**22 psig**
(0.8 bar)		**(0.7 bar)**		**(1.5 bar)**

Adjustment
See instruction printed on top of control

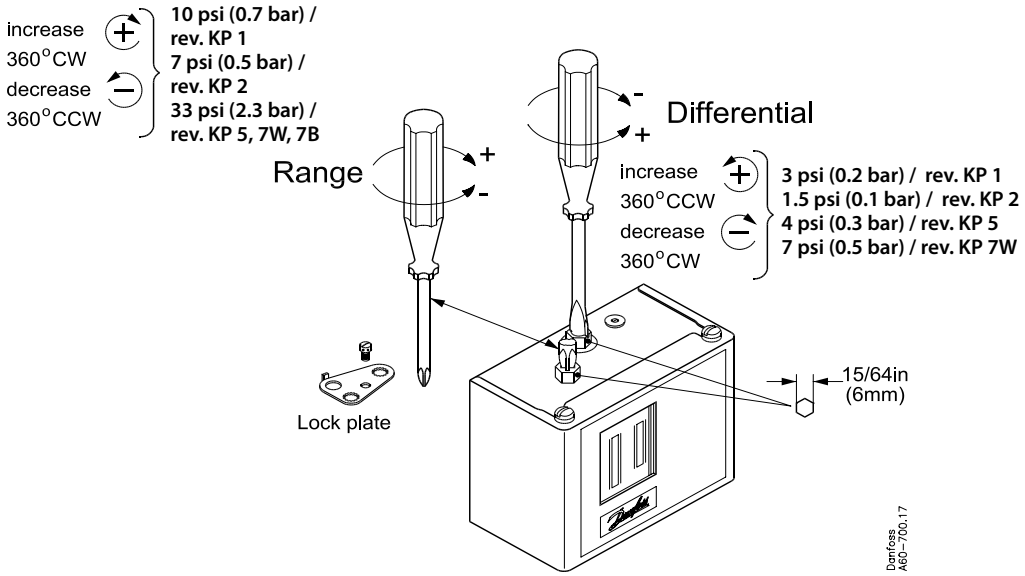

Note:
Remove lock plate before adjustment.
Replace lock plate after adjustment (if desired).

RI.5A.J1.22 © Danfoss A/S

060R9306

Pressure Controls
KP1, KP1W, KP1A, KP2, KP5, KP5A, KP6W, KP6B, KP6S, KP6AW, KP6AB, KP6AS, KP7W, KP7B, KP7S

060R9306

KP 1, 2, 5, 7: HFC, HCFC, CFC
KP 6: HFC, HCFC, CFC, CO_2
KP 1A, 5A, 6A: R 717 (NH_3)

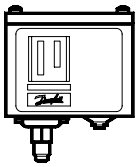

KP 1, 2, 5, 6, 7

KP 1, 2, 5, 6, 7

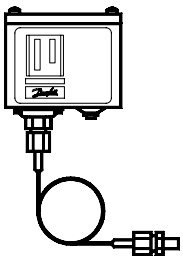

KP 1A, 5A

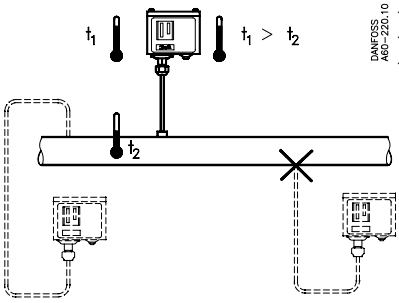

t1 min. KP 5 : -40C (-40F)
t1 min. KP 1,2,6,7 : -25C (-13F)
t1 max. : 65C (150F)

Relative humidity RH: 30 to 98%
vibrations resistance: 4g (10-1000 Hz)

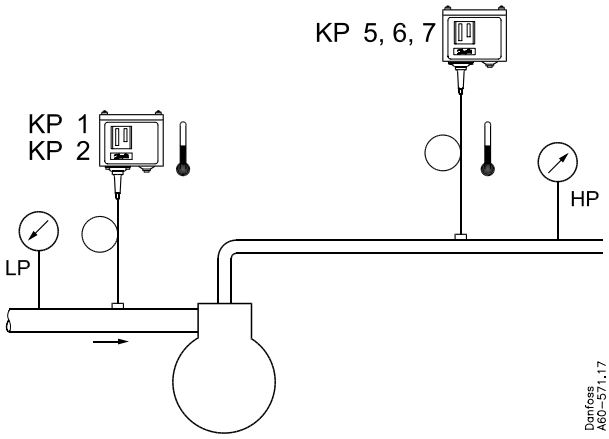

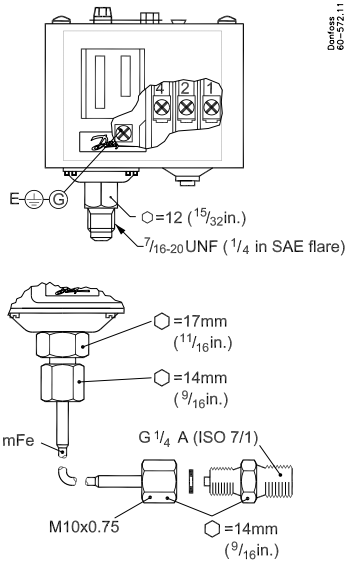

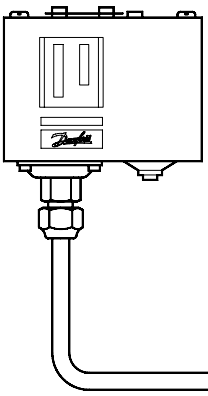

P_{test} max.:
KP 1,2: 20 bar p_e (285 psig)
KP 5, 7: 35 bar p_e (505 psig)
KP 6: 46,5 bar p_e (675 psig)

MWP/PB
(Maximum Working Pressure)

Type	Range	MWP/PB
KP 1	–0.2 → 7.5 bar	250 psi / 17 bar
KP 1, reset	–0.9 → 7 bar	250 psi / 17 bar
KP 1W	0.5 → 3 bar	250 psi / 17 bar
KP 2	–0.2 → 5 bar	250 psi / 17 bar
KP 5	8 → 32 bar	505 psi / 35 bar
KP 6	8 → 42 bar	675 psi / 46.5 bar
KP 7	8 → 32 bar	505 psi / 35 bar

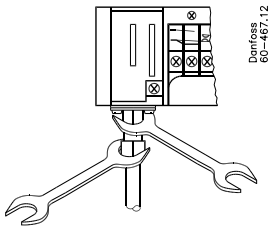

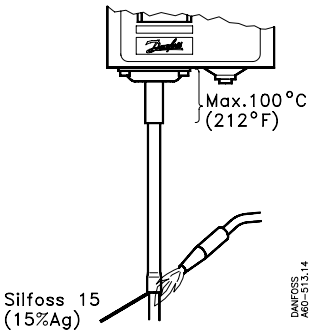

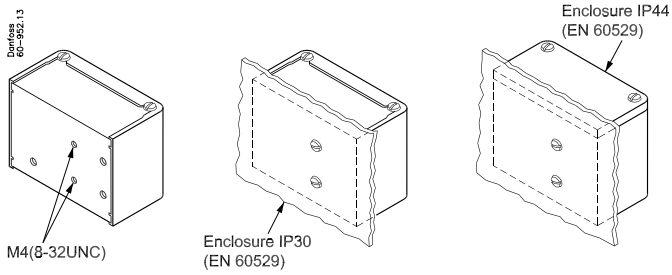

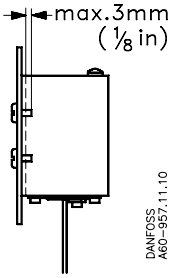

DKRCC.PI.CA0.C1.00-520H3265

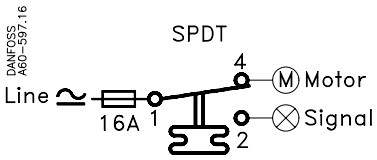

Contact 1-4 opens on pressure drop

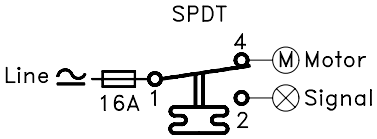

Contact 1-4 opens on pressure drop

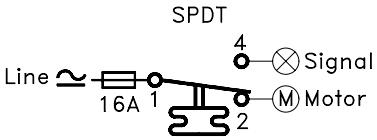

Contact 1-2 opens on pressure rise

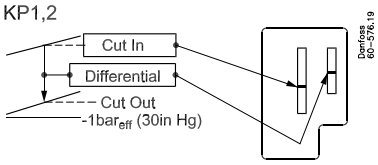

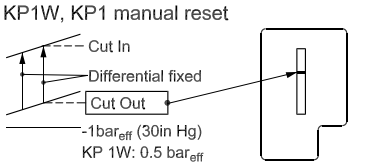

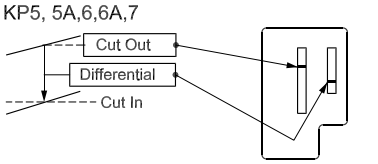

Electrical rating - General

LR 112A	AC 1: 16A 400 V AC 3: 16A 400 V AC 15: 10A 230 V	DC 13 12 W 220 V⎓

Short circuit protection: Fuse 16 Amp.

When used acc. to UL regulations

c UL us Listed refrigeration controller 61B5

Voltage AC	Voltage DC	FL A	LR A	Resist. load	Pilot duty
240		8	48	8A	3A
120		16	96	16A	
	240				12W

Use copper wire only
Tightening torque 20lb. in.

Automatic reset

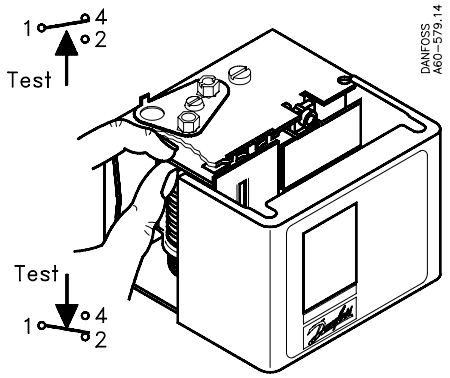

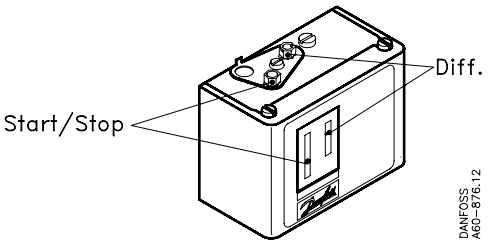

Manual reset

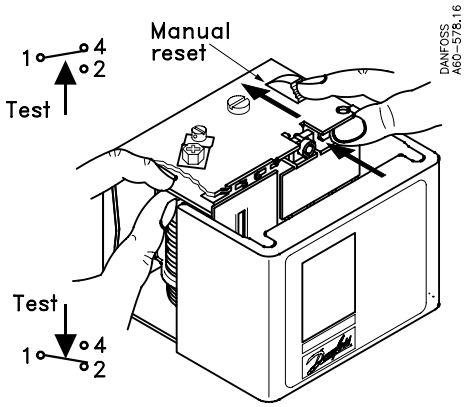

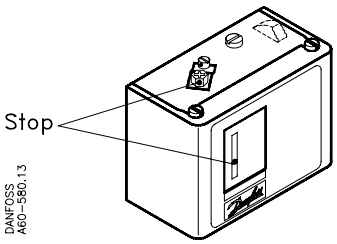

Diff.

KP 1, 1A:	0.7 bar (10 psi)
KP 5, 5A:	3 bar (43 psi)
KP 6B, 6S, 6AB, 6AS, 7B, 7S:	4 bar (58 psi)

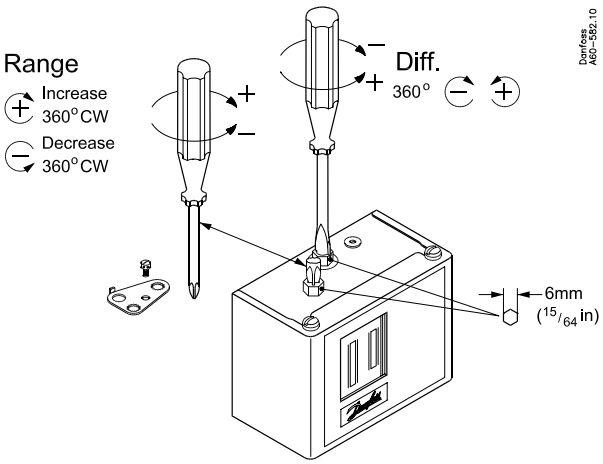

©Danfoss A/S 01-2009 (AC-BNM/mr)

INSTRUCTIONS

KP 15
with goldplated contacts

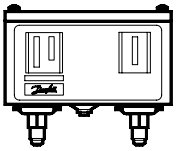

060R9505

KP 15: CFC, HFC, HCFC

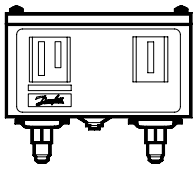

KP 15

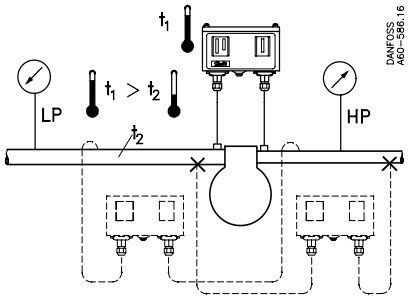

t_1 min. KP 15: –40°F (–40°C)
t_1 max. KP 15: 65°C (150°F)

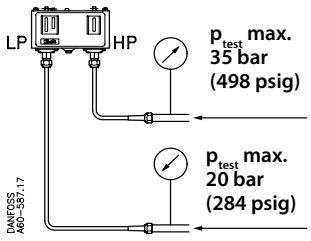

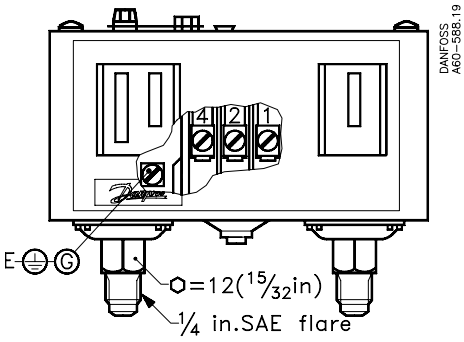

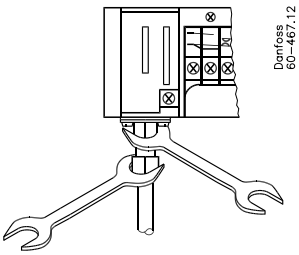

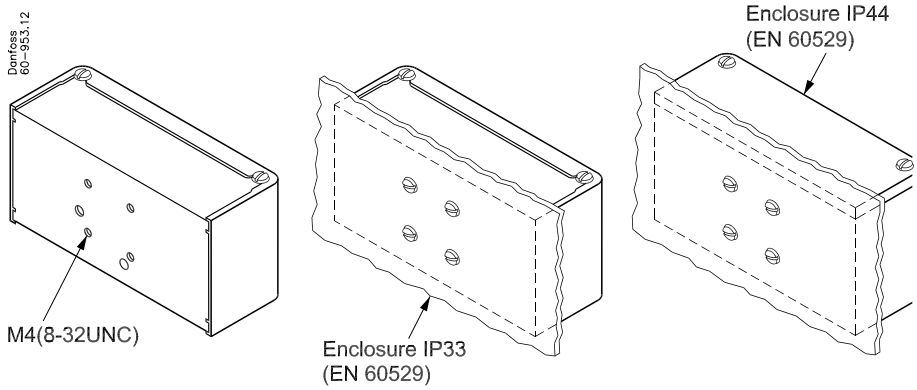

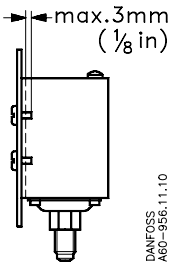

© Danfoss A/S

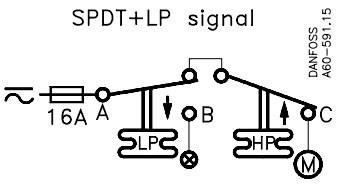

Kontaktbelastning/Contact load
Kontaktbelastung/Charge de contact

Regulering Regulation Regelung Régulation	Max.:	100 mA/30 V	a.c./d.c c.a./c.c
	Min.:	1 mA/ 5 V	a.c./d.c. c.a./c.c
Alarm Alarme	Max.:	10 A /400 V	a.c./c.a. c.a./c.c
		12 W/220 V	d.c./c.c. c.a./c.c
	Min.:	1 mA/5 V	a.c./d.c. c.a./c.c
		1 mA/5 V	c.a./c.c. c.a./c.c

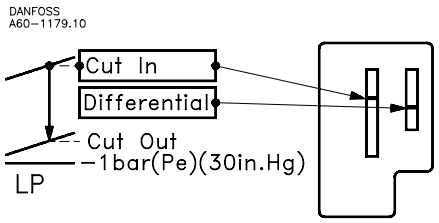

LP
KP 15

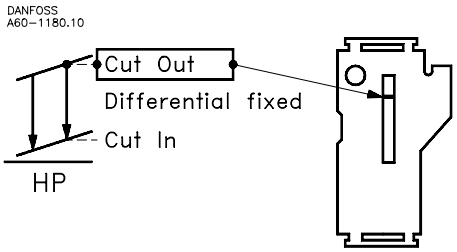

HP
KP 15

Manual test

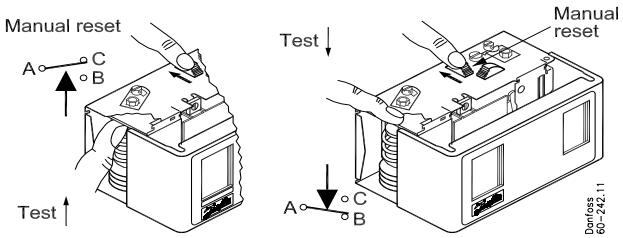

KP 15

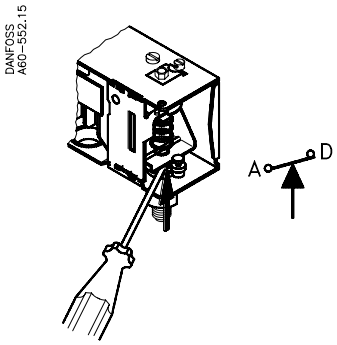

KP 15

Type/ Typ	Område/Range Bereich/Plage	Tilladeligt driftstryk/Max. working pressure Max. Betriebsüberdruck/Pres. de service max	
KP 15	LP: –0.2 → 7.5 bar HP: 8 → 32 bar	17 bar 32 bar	242 psi 455 psi
KP 15 Reset	LP: –0.2 → 7.5 bar HP: 8 → 32 bar	17 bar 32 bar	242 psi 455 psi

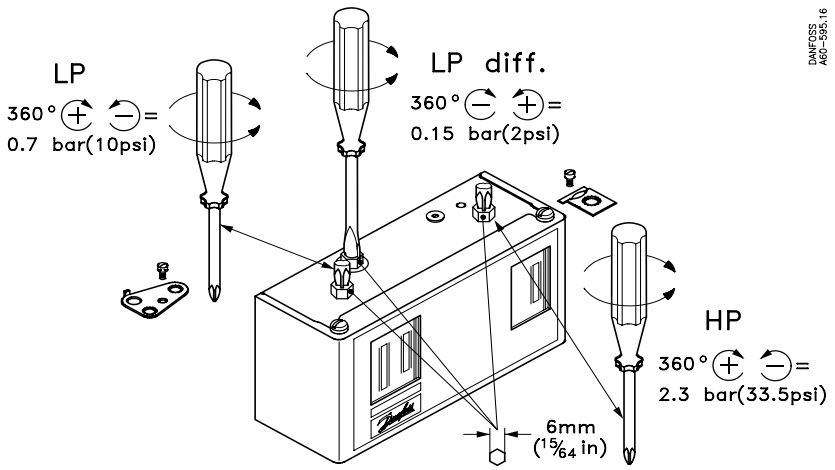

Produced by Danfoss A/S, Advertising Department 98.11 Bi.PS

INSTRUCTIONS

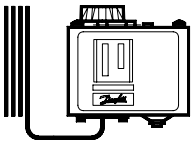

KP 61 → 81

060R9758

KP 61, 62, 63, 68, 69 vapour charge
KP 62, 71, 73, 75, 77, 79, 81 adsorption charge (cross ambient)

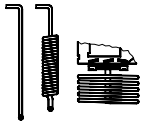

Vapour charge

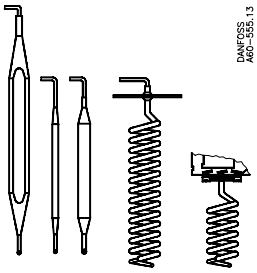

Adsorption charge

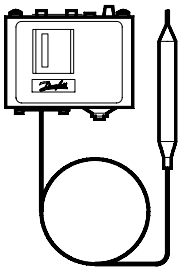

Manuel reset

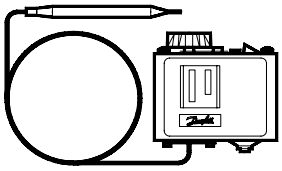

µ-stop

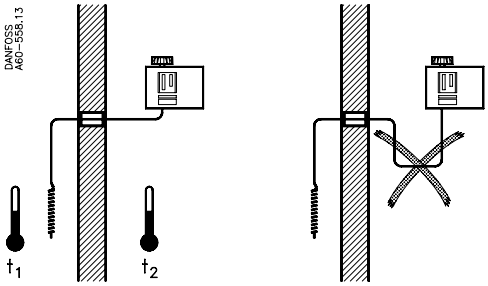

$t_2 \geq t_1 + 2°C (3.5°F)$

Vapour charge

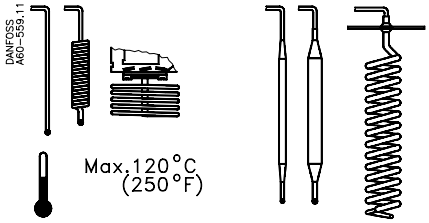

	Max.
KP 62,71,73:	80°C(175°F)
KP 75	:110°C(230°F)
KP 77	:140°C(285°F)
KP 79	:150°C(300°F)
KP 81	:200°C(390°F)

min.−40°C(−40°F)
max. 65°C(150°F)

DANFOSS
A60-560.11

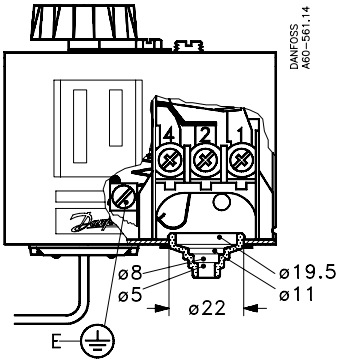

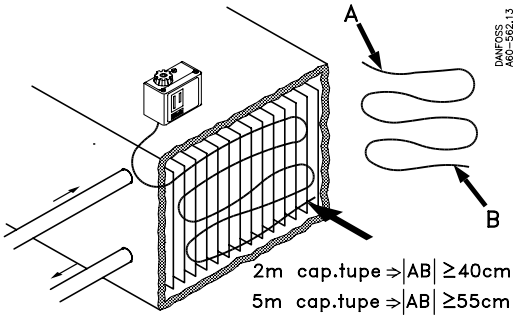

Electrical rating - General

LR 112A	AC 1: 16A AC 3: 16A AC 11: 10 A	400 V≃	DC 11 12 W 220 V~–

When used acc. to UL regulations

c UL us Listed refrigeration controller 61B5

Voltage AC	Voltage DC	FL A	LR A	Resist. load	Pilot duty
240		8	48	8A	3A
120		16	96	16A	
	240				12W

Use copper wire only
Tightening torque 20lb. in.

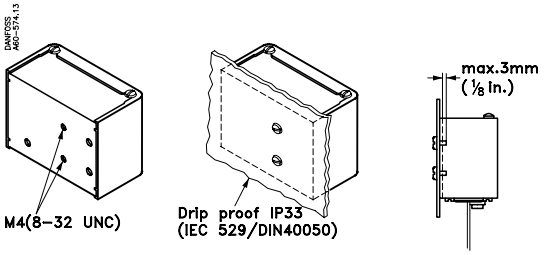

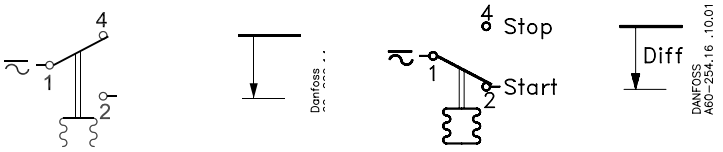

© Danfoss A/S

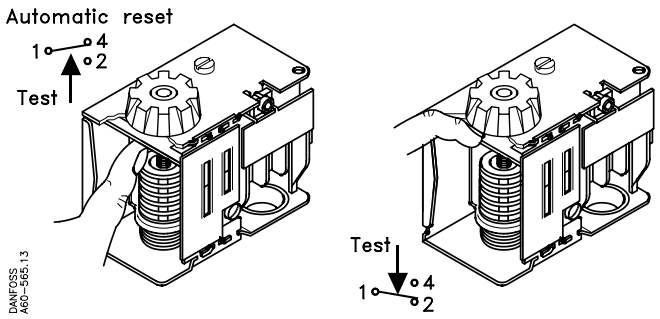

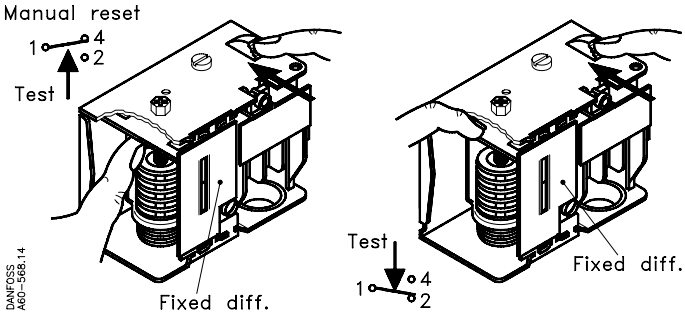

KP 61	060L1104, 060L1105	diff. = 3°C (5.4°F)
KP 71	060L1115	diff. = 3°C (5.4°F)
KP 73	060L1138	diff. = 3.5°C (6.3°F)

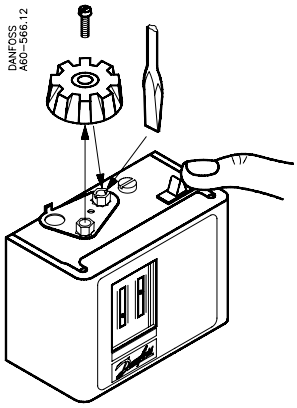

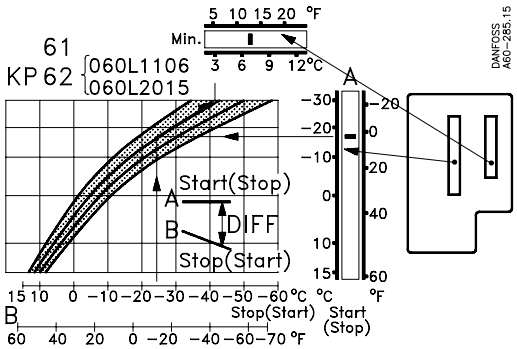

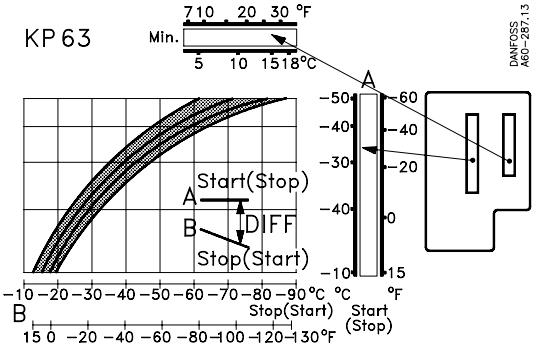

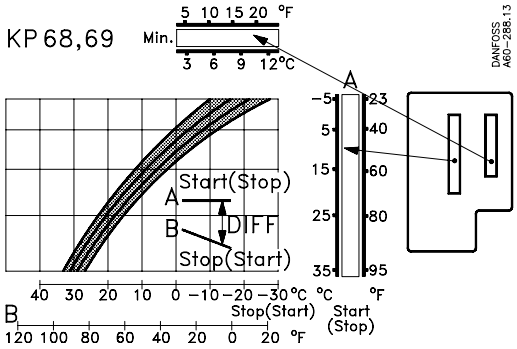

Vapour charge

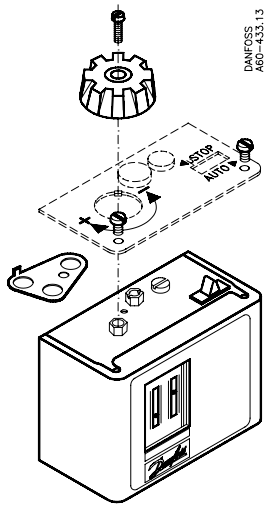

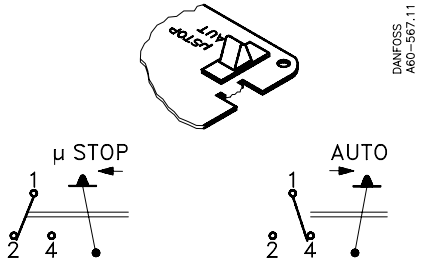

KP 61	060L1103, 1128	Vapour charge
KP 62	060L1110	Adsorption charge
KP 73	060L1118	Adsorption charge

© Danfoss A/S (AC-RCM,nl) 03 - 2000 - CCB

Instructions

060R9747

Pressure Controls
KP 15, KP 17W, KP 17B, KP 25

060R9747

Types
The controls can be used with CFC, HFC, HCFC refrigerants.

CAUTION: Do not install these controls on ammonia systems

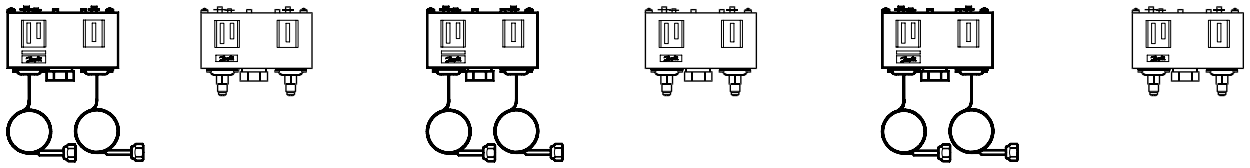

KP 15 man. (LP) / man. (HP) reset | **KP 15, KP 17B auto. (LP) / man. (HP) reset** | **KP 15, KP 17W, KP 25 auto. (LP) / auto (HP) reset**

Ambient temperatures

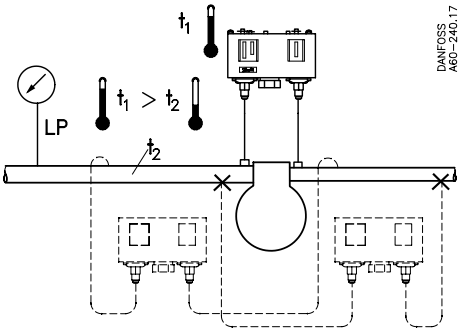

t_1 min.	KP 15, KP 25:	–40°F (–40°C)
	KP 17W, KP 17B:	–13°F (–25°C)
t_1 max.		150°F (65°C)

CAUTION: Do not mount the control in a position where dirt, sediment, or oil will affect the operation of the control.

Test pressure (p_{TEST})

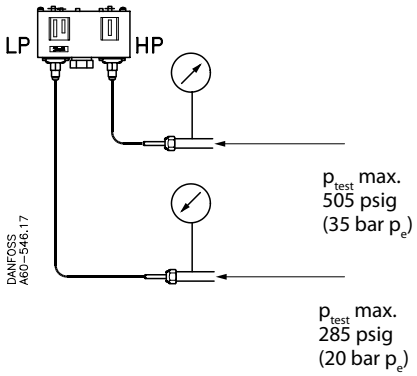

Enclosure

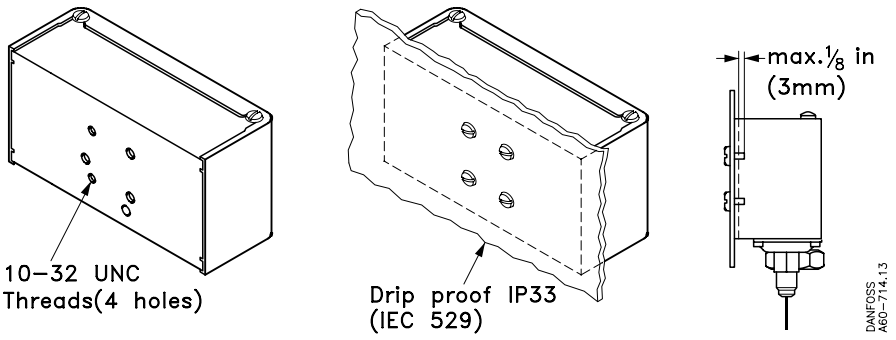

CAUTION: The mounting panel must be plane to avoid damage of control.

©Danfoss A/S

Connections

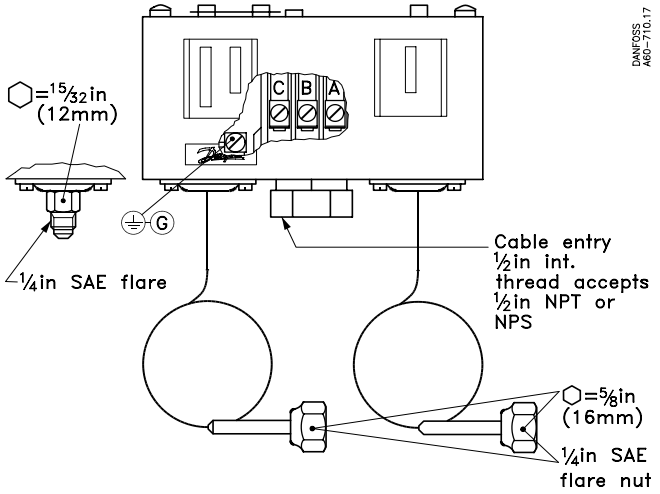

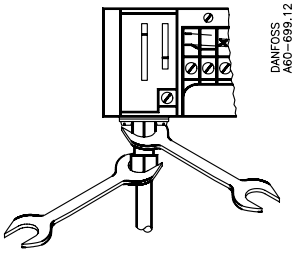

Wiring

CAUTION: Disconnect power supply before wiring connections are made to avoid possible electrical shock or damage to equipment.

All wiring should conform to the National Electrical Code and local regulations.

SPDT
Controls with low pressure (LP) signal

Terminal block

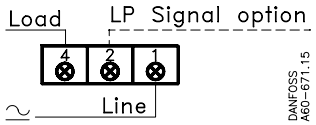

CAUTION: Use terminal screws furnished in the contact block.
Use tightening torque 20 lb. in (2.3 Nm).
Use copper wire only.

Low pressure (LP) side:
A-C close on LP rise
A-C open on LP drop

High pressure (HP) side.
A-C open on HP rise
A-C close on HP drop

LP signal option:
A-B close on LP drop

See label for current wiring inside cover

Controls with low pressure (LP) and high pressure (HP) signal)
KP 15 and KP 17W. Only code nos.:
060-2024 060-2027 060-2030
060-2026 060-2029 060-2031
(stamped on top of control)

Terminal block

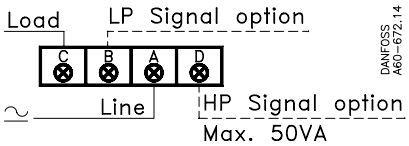

CAUTION: Use terminal screws furnished in the contact block.
Use tightening torque 20 lb. in (2.3 Nm).
Use copper wire only.

Low pressure (LP) side:
A-C close on LP rise
A-C open on LP drop

High pressure (HP) side.
A-C open on HP rise
A-C close on HP drop

LP signal option:
A-B close on LP drop

HP signal option:
A-D close on HP rise

Contact load ratings

120 V a.c.	16 FLA, 96 LRA
240 V a.c.	8 FLA, 48 LRA
240 V d.c.	12 W pilot duty

See label inside cover

Function

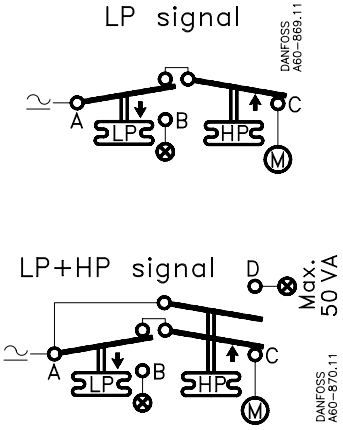

Note!
Ⓜ = Load
⊗ = Signal option
= Bellows movement on pressure rise
¬ = Bellows movement on pressure drop

Manual tripping
(Electrical contacts/wiring test)

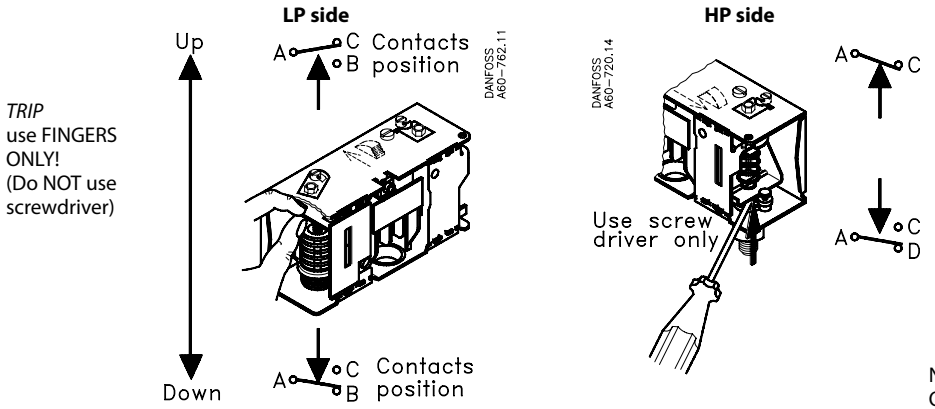

Note:
On controls with LP and/or HP man. reset, push corresponding LP and/or HP man. reset knob during tripping.

Manual tripping

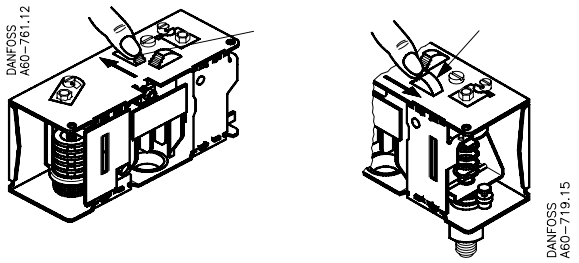

To resume control operation after safety cut-out, push man. reset knob as indicated.

Note:
LP man. reset is possible only after system pressure has risen above cut-in value.

HP man. reset is possible only after system pressure has dropped below cut-out value.

Convertible reset
KP 15, code nos.: 060-2025, 060-2028

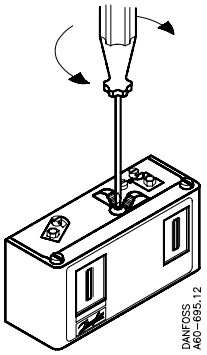

Turn plate to desired reset configuration

Reset options

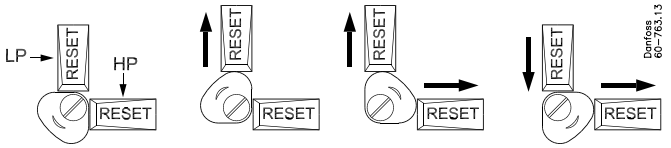

LP man. HP-man.	LP-auto. HP-man.	LP-auto. HP-auto.	LP-man. HP-auto.

Adjustment spindle(s) location

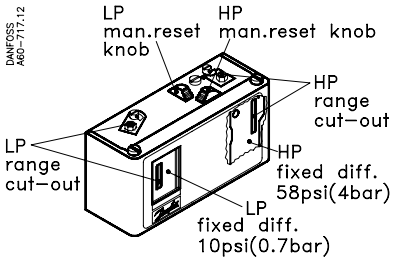

KP 15

A. MAN./MAN. RESET

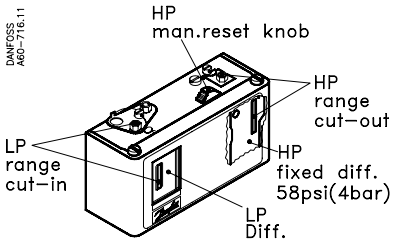

KP 15, KP 17B

B. AUTO/MAN. RESET

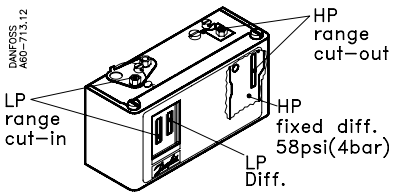

KP 15, KP 17W, KP 25

C. AUTO./AUTO. RESET

RI5AK222 - 520H0146

Setting

Low pressure (LP) side setting

KP 15, KP 17W, KP 17B and KP 25 with LP auto. reset only

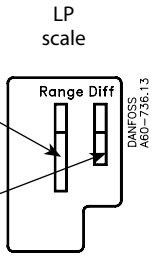

1. Adjust range spindle to desired CUT-IN value.
2. Adjust differential spindle to desired DIFFERENTIAL (DIFF.) value.

CUT-IN minus DIFFERENTIAL equals CUT-OUT

Example:

CUT-IN	–	DIFF.	=	CUT-OUT
30 psig	–	10 psi	=	20 psig
(2.1 bar)		(0.7 bar)		(1.4 bar)

KP 15 with LP man. reset only
KP 15 with convertible LP auto.) man. reset

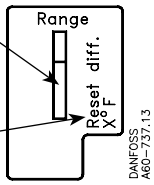

1. Adjust range spindle to desired CUT-OUT value.
2. DIFFRENTIAL (DIFF.) is fixed. Value printed on scale plate.

CUT-IN equals CUT-OUT plus DIFFERENTIAL

Example:

CUT-OUT	+	DIFF.	=	CUT-IN
12 psig	+	10 psi	=	22 psig
(0.8 bar)		(0.7 bar)		(1.5 bar)

High pressure (HP) side setting

KP 15, KP 17W, KP 17B and KP 25 with HP auto. or man. reset

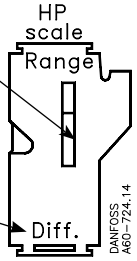

1. Adjust range spindle to desired CUT-OUT value.
2. DIFFERENTIAL (DIFF.) is fixed. Value printed on scale plate.

CUT-OUT minus DIFFERENTIAL equals CUT-IN

Example:

CUT-OUT	–	DIFF.	=	CUT-IN
203 psig	–	58 psi	=	145 psig
(14 bar)		(4 bar)		(10 bar)

Adjustment

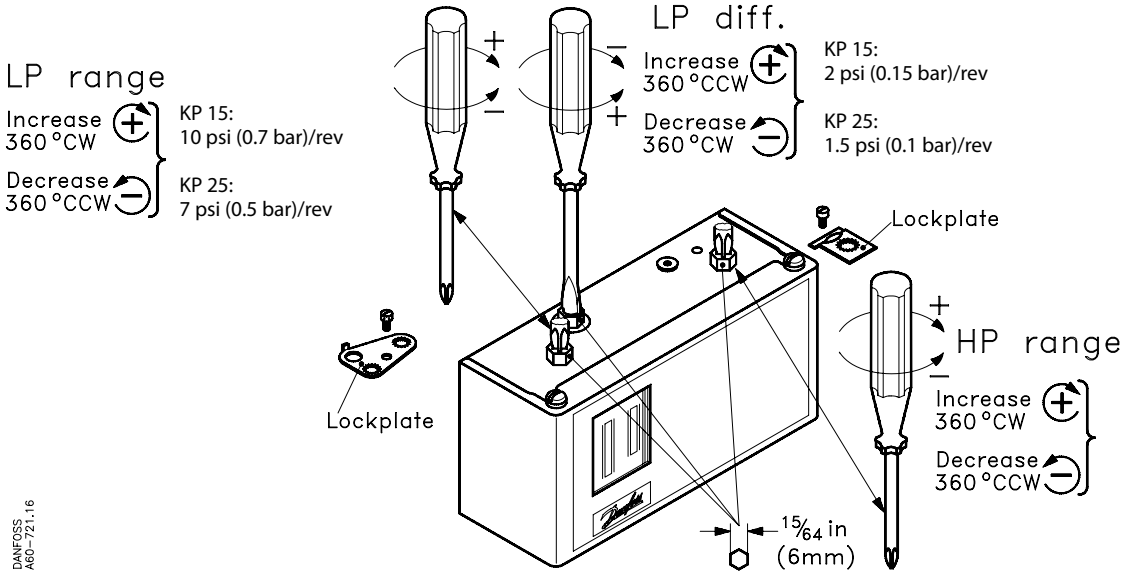

Note:
Remove lockplate before adjustment.
Replace lockplate after adjustment (if desired).

©Danfoss A/S IC-MC/mr 02-2005

060R9770

IP 55 Enclosure

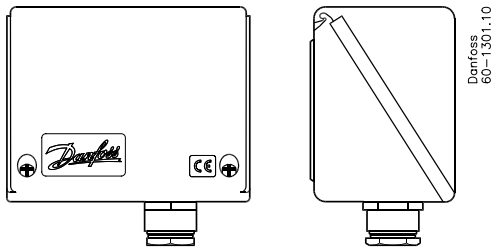

IP 55 enclosure for single KP
code number 060-033066

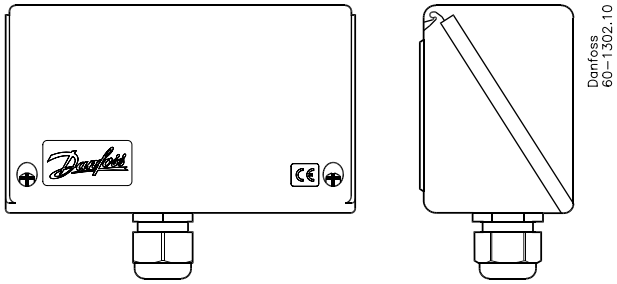

IP 55 enclosure for dual KP
code number 060-035066

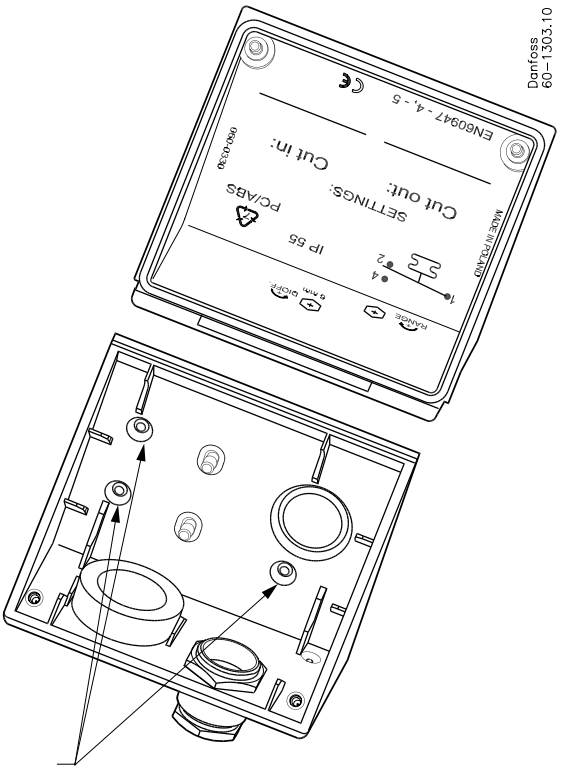

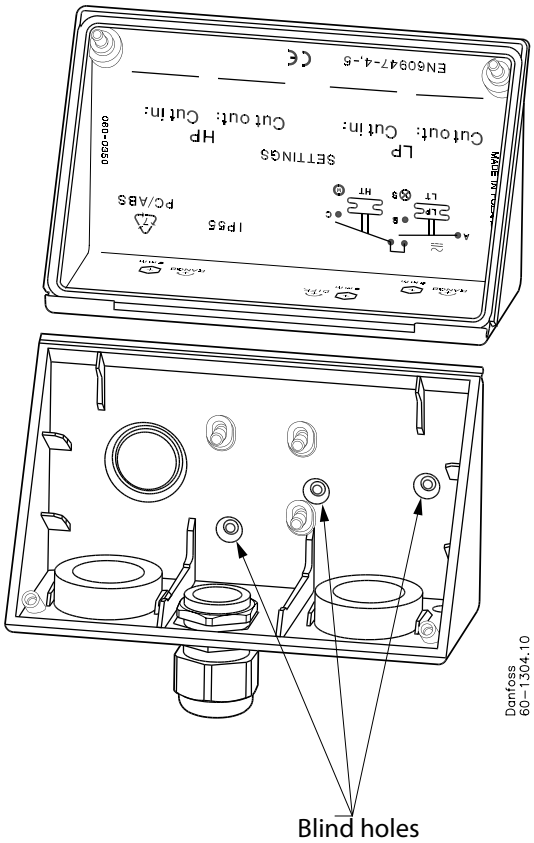

Remark:
If blind holes are to be used for mounting, the maximum torque must not exceed 2.5 Nm

© Danfoss A/S (IC-MC/mr), 11 - 2004

INSTRUCTIONS

KPR 1, 5

060R9757

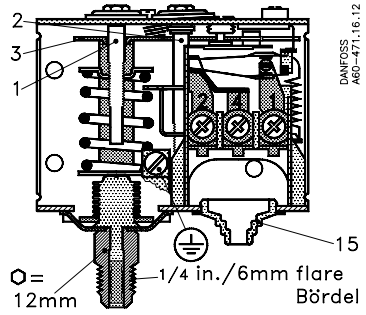

Fig. 1

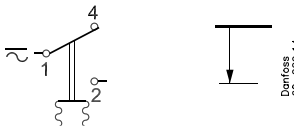

Fig. 2

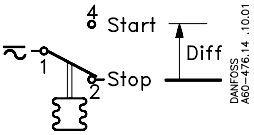

Fig. 3

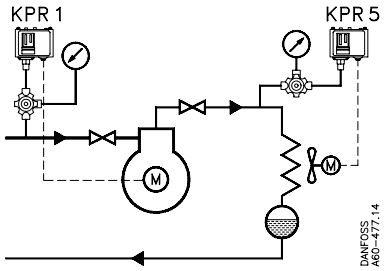

Fig. 4

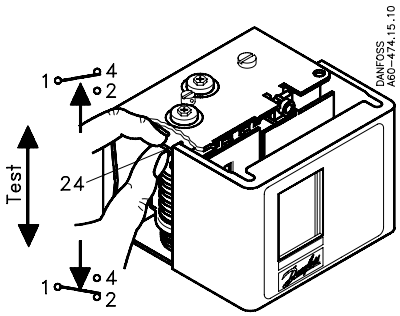

Fig. 7

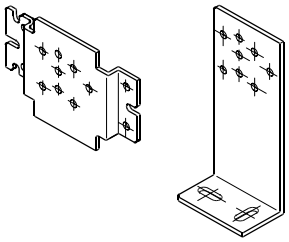

Fig. 10

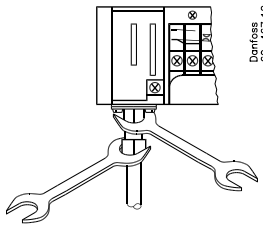

Fig. 5

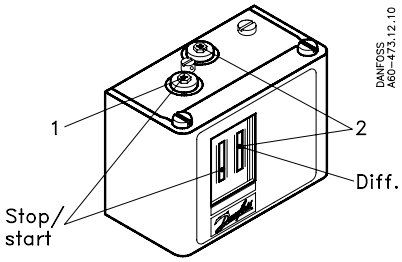

Fig. 8

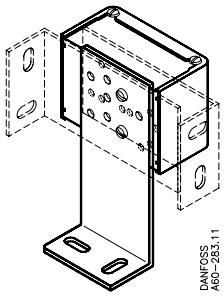

Fig. 11

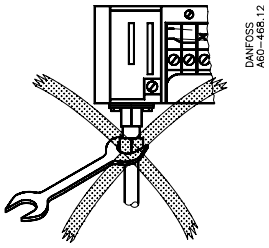

Fig. 6

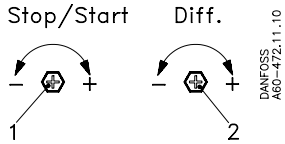

Fig. 9

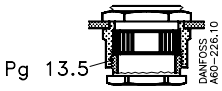

50 stk./pieces/ Stck/pièces 060-1059

Fig. 12

© Danfoss A/S

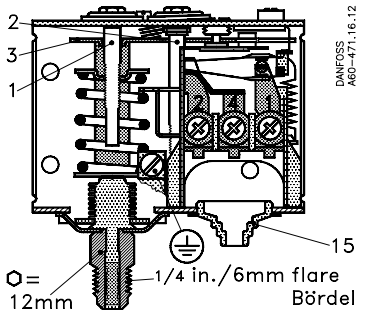

Fig. 1

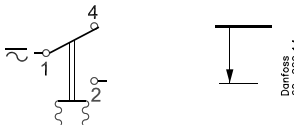

Fig. 2

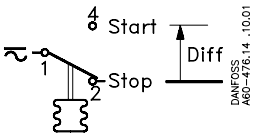

Fig. 3

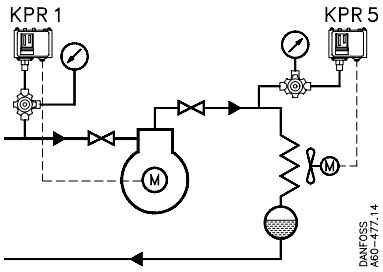

Fig. 4

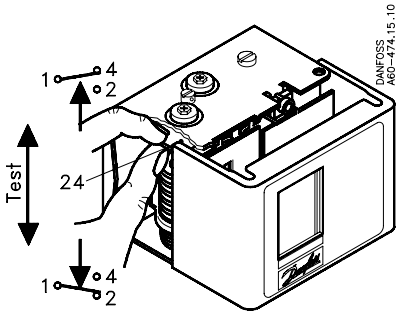

Fig. 7

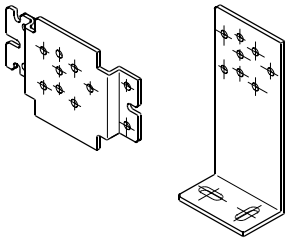

Fig. 10

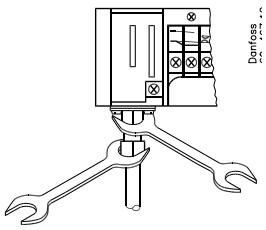

Fig. 5

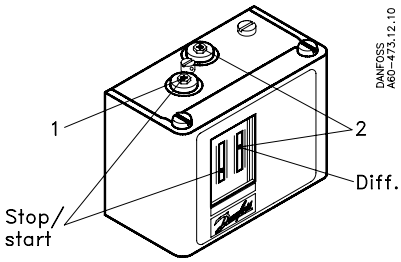

Fig. 8

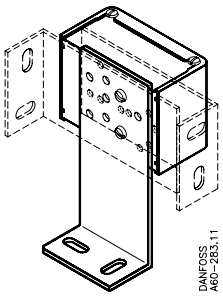

Fig. 11

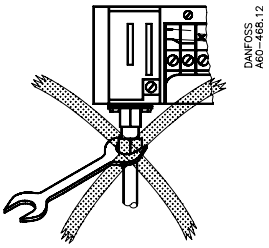

Fig. 6

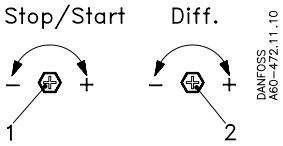

Fig. 9

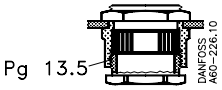

50 stk./pieces/ Stck/pièces 060-1059

Fig. 12

DANSK

Lavtrykspressostat, type KPR 1, best. nr. 060-1107

Fig.2
Kontakterne 1-4 bryder, og 1-2 slutter ved faldende tryk.

Højtrykspressostat, type KPR 5, best. nr. 060-1174

Fig. 3
Kontakterne 1-2 bryder, og 1-4 slutter ved stigende tryk.

»START« = starttryk
»STOP« = stoptryk
»DIFF« = differens

Tekniske data

Type	Regulerings-område p_e bar	Differens Δp bar	Maks. drifts-tryk PB bar
KPR 1	–0.2 - +8	0.5 - 1.5	15
KPR 5	6 - 18	1.25 - 2.5	20

Omgivelsestemperatur
–40 til +65°C (+80°C i maks. 2 timer).

Kapsling og tæthed
IP 33 (VDE) i henhold til IEC 529 eller DIN 40050.

Kontaktsystem
Énpolet skiftekontakt SPDT
Kontaktsystemet opfylder betingelserne i VDE*0660.
*VDE = Verband Deutscher Elektrotechniker

Kontaktbelastning
Vekselstrøm. a.c.~
Ohmsk belastning: 10 A, 440 V
Induktiv belastning: 6 A, 440 V
Maks. startstrøm: 50 A
(»L.R.« = blokeret rotor)
Jævnstrøm, d.c. 12 W, 220 V

Montering
Fig. 4
KPR tilsluttes med $^1/_4$ in kobberrør eller med kapillarrør.
Det er normalt ikke nødvendigt at bruge dæmpesløjfe for at dæmpe pulsationerne fra anlægget.
Monteringskonsol kan leveres. Se fig. 10.
Undgå tilslutning i eller ved væskelommer.

Fig. 5 og 6
Hold kontra på tilslutningsstudsen, når flareomløberen spændes eller løsnes!

El-tilslutning
Fig. 2 og 3
Apparatet er forsynet med kabelgennemføring til 6-14 mm kabel (15, fig. 1). Pg 13.5 forskruning kan fås som tilbehør (fig. 12).

Afprøvning
Fig. 7
Underarmen 24 vippes.
NB! Benyt kun den viste metode ved afprøvning!
Kontaktsystemet må aldrig aktiveres direkte ved hjælp at skruetrækker eller lignende!

Indstilling
Fig. 8 og 9
Låseskruen mellem indstillingsspindlerne løsnes.
Stop- eller starttrykket indstilles med områdespindelen 1 og aflæses på »STOP / START«-skalaen.
Differensen indstilles med differens-spindelen 2 og aflæses på »DIFF«-skalaen. Efter endt indstilling spændes låseskruen atter.

A. *Lavtryksregulering med KPR 1*
Se fig. 2 og 4.
Kompressormotoren ønskes stoppet ved faldende tryk og startet ved stigende tryk.
Indstil starttrykket med områdespindelen 1.
En omdrejning ~ 0.7 bar.
Differensen = starttrykket minus stoptrykket.
Indstil differensen med differensspindelen 2.
Én omdrejning ~ 0.15 bar.
NB! Stoptrykket skal ligge over absolut vakuum (p_e = –1 bar)! Hvis kølekompressoren ved lave stoptryk ikke vil stoppe, undersøg derfor, om differensen er indstillet til en for stor værdi.
Kontroller start- og stoptrykket med manometer!

B. *Højtryksregulering (kondensatortryk-regulering) med KPR 5*
Se fig. 3 og 4.
Kondensatorventilatoren ønskes startet ved stigende tryk og stoppet ved faldende tryk.
Indstil starttrykket med områdespindelen 1.
En omdrejning ~ 2.3 bar.
Differensen = starttrykket minus stoptrykket.
Indstil differensen med differensspindelen 2.
En omdrejning ~ 0.28 bar.
Kontroller start- og stoptrykket med manometer!

ENGLISH

Low-pressure pressure control, type KPR 1, code no. 060-1107

Fig. 2
Contacts 1-4 break and 1-2 make at falling pressure.

High-pressure pressure control, type KPR 5, code no. 060-1174

Fig. 3
Contacts 1-2 break and 1-4 make at rising pressure.

"START" = starting pressure
"STOP" = stop pressure
"DIFF" = differential

Technical data

Type	Regulation range p_e bar	Differential Δp bar	Max. working pressure PB bar
KPR 1	–0.2 - +8	0.5 - 1.5	15
KPR 5	6 - 18	1.25 - 2.5	20

Ambient temperatures
–40 to +65°C (+80°C for max. 2 hours).

Enclosure and tightness
IP 33 (VDE) in accordance with IEC 529 or DIN 40050.

Contact system
Single-pole switch SPDT.
The contact system meets the conditions laid down in VDE*0660.
*VDE = Verband Deutscher Elektrotechniker

Contact load
Alternating current, a.c.~
Ohmic load: 10 A, 440 V
Inductive load: 6 A, 440 V
Max. starting current: 50 A
("L.R." = locked rotor)

Direct current, d.c. 12 W, 220 V

Fitting
Fig. 4
KPR is connected with $^1/_4$ in copper tube or with capillary tube.
Normally it is not necessary to use a dampening loop to damper pulsation's from the plant.
Mounting bracket can be supplied. See fig. 10.
Avoid mounting in or close to liquid pockets.

Figs. 5 and 6
Hold in counter position when flare nut is tightened or loosened.

Electrical connections
Figs. 2 and 3
The unit is provided with a cable entry for 6-14 mm cable (15, fig. 1).
Pg 13.5 screwed cable entry available as accessory (fig.12).

Testing
Fig. 7
Under arm 24 to be rocked.
NB! Use only the method shown for testing.

The contact system must never be activated direct by means of a screwdriver or the like.

Setting
Figs. 8 and 9
Loosen the locking screw between the setting spindles.
Stop or start pressure is set with the range spindle 1 and read off on the "STOP/START" scale. The differential is set with the differential spindle 2 and read off on the "DIFF" scale. After each setting, tighten the locking screw again.

A. *Low pressure with KPR 1*
See figs. 2 and 4.
The compressor motor is to be stopped at falling pressure and started at rising pressure.
Set the starting pressure with the range spindle 1. One turn ~ 0.7 bar.
Differential = starting pressure minus stop pressure.
Set the differential with the differential spindle 2. One turn ~ 0.15 bar.
NB. The stop pressure must be above the absolute vacuum (p_e = –1 bar). If the refrigeration compressor will not stop at low stop pressure, check whether the differential is set to too high a value.
Check start and stop pressures with a gauge.

B. *High pressure control (condenser pressure control) with KPR 5*
See figs. 3 and 4.
The condenser fan is to be started at rising pressure and stopped at falling pressure. Set the starting pressure with the range spindle 1. One turn ~ 2.3 bar.
Differential = starting pressure minus stop pressure.
Set the differential with the differential spindle 2. One turn ~ 0.28 bar.
Check starting and stop pressures with a gauge.

DEUTSCH

Niederdruckpressostat, Typ KPR 1, Bestell-Nr. 060-1107

Fig. 2
Die Kontakte 1-4 öffnen, die Kontakte 1-2 schließen bei Druckabfall.

Hochdruckpressostat, Typ KPR 5, Bestell-Nr. 060-1174

Fig. 3
Die Kontakte 1-2 öffnen, die Kontakte 1-4 schließen bei Druckanstieg.
»START« = Einschaltdruck
»STOP« = Abschaltdruck
»DIFF« = Differenz

Technische Daten

Typ	Regel-bereich p_e bar	Differenz Δp bar	Max. Be-triebsdruck PB bar
KPR 1	–0.2 bis +8	0.5 bis 1.5	15
KPR 5	6 bis 18	1.25 bis 2.5	20

Umgebungstemperatur
–40 bis +65°C (+80°C für max. 2 Stunden).

Schutzart
IP 33 (VDE) nach IEC 529 oder DIN 40050.

Kontaktsystem
Einpoliger Wechselkontakt SPDT.
Das Kontaktsystem entspricht den Bedingungen nach VDE 0660.

Schaltvermögen
Wechselstrom, a.c.~
Omsche Last: 10 A, 440 V
Induktive Last: 6 A, 440 V
Max. Einschaltstrom: 50 A
(»L.R.« = blockierter Läufer)

Gleichstrom, d.c. 12 W, 220 V

Montage
Fig.4
KPR ist mit 1/4 oder 6 mm Kupferrohr oder mit Kappillarrohr anzuschließen.
Normalerweise erübrigt sich eine Dämpfschleife zum Dämpfen der Pulsationen aus der Anlage.
Eine Montagekonsole kann geliefert werden. Siehe Fig.10.
Anschluß an oder in der Nähe von Flüssig-keitssäcken ist zu vermeiden.

Fig.5 und 6
Beim Spannen oder Lösen der Bördelüberwurfmutter ist am Anschluß-Stutzen gegenzuhalten!

Elektrischer Anschluß
Fig.2 und 3
Das Gerät ist mit einer Kabeldurchführung für 6-14 mm Kabel versehen (15, Fig.1).
Als Zubehör ist eine Pg 13.5 Verschraubung erhältlich (Fig.12).

Überprüfung
Fig.7
Unteren Hebel 24 kippen.
Zu beachten: Beim Überprüfen nur das gezeigte Verfahren benutzen!

Das Kontaktsystem darf nie direkt mit einem Schraubenzieher oder dgl. betätigt werden!

Einstellung
Fig.8und 9
Stellschraube zwischen Einstellspindeln lösen.
Abschalt- oder Einschaltdruck mit der Bereichsspindel 1 einstellen, und Druck an der Skala »STOP/START« ablesen.
Differenz mit der Differenzspindel 2 einstellen und an der Skala »DIFF« ablesen.
Nach beendeter Einstellung Stellschraube wieder anziehen.

A. *Niederdruckregelung mit KPR 1*
Siehe Fig. 2 und 4.
Der Kompressormotor soll bei abfallendem Druck abgeschaltet und bei ansteigendem Druck wieder eingeschaltet werden.
Hierzu Einschaltdruck mit der Bereichsspindel 1 einstellen. Eine Umdrehung entspricht etwa 0.7 bar.
Differenz = Einschaltdruck abzgl. Abschaltdruck.
Differenz mit der Differenzspindel 2 einstellen. Eine Umdrehung entspricht etwa 0.15 bar.
Zu beachten: Der Abschaltdruck muß höher liegen als das absolute Vakuum (p_e = –1 bar)!
Falls der Kältekompressor bei niedrigen Abschaltdrücken nicht zum Stillstand kommen will, ist zu überprüfen, ob die Differenz auf einen zu hohen Wert eingestellt ist.
Ein- und Abschaltdruck mit einem Manometer kontrollieren!

B. *Hochdruckregelung*
(Verflüssigerdruckregelung) mit KPR 5
Siehe Fig.3 und 4.
Der Verflüssigerventilator soll bei ansteigendem Druck eingeschaltet und bei abfallendem Druck abgeschaltet werden.
Einschaltdruck mit der Bereichsspindel 1 einstellen. Eine Umdrehung entspricht etwa 2.3 bar.
Differenz = Einschaltdruck abzgl. Abschaltdruck.
Differenz mit der Differenzspindel 2 einstellen. Eine Umdrehung entspricht etwa 0.28 bar.
Ein- und Abschaltdruck mit einem Manometer kontrollieren!

FRANÇAIS

Pressostat basse pression, type KPR 1, numéro de código 060-1107

Fig. 2
Les contacts 1-4 se déclenchent et les contacts 1-2 s'enclenchent à une diminution de la pression.

Pressostat haute pression, type KPR 5, numéro de código 060-1174

Fig. 3
Les contacts 1-2 se déclenchent et les contacts 1-4 s'enclenchent à une augmentation de la pression.

« START » = pression de démarrage
« STOP » = pression d'arrêt
« DIFF » = différentiel

Caractéristiques techniques

Type	Gamme de réglage p_e bar	Diffe-rentiel Δp bar	Pression de service maxi PB bar
KPR 1	–0.2 - +8	0.5 - 1.5	15
KPR 5	6 - 18	1.25 - 2.5	20

Température ambiante
–40 à +65°C (+80°C pendant 2 heures au max.).

Protection et étanchéité
IP 33 (VDE) selon IEC 529 ou DIN 40050.

Système de contact
Contact inverseur unipolaire SPDT
Le système de contact répond aux conditions VDE*0660.
***VDE = Verband Deutscher Elektrotechniker**

Charge de contact
Courant alternatif, c.a.~
Charge ohmique: 10A, 440V
Charge inductive: 6A, 440V
Courant de démarrage max.: 50A
(« L.R. » = rotor bloqué)

Courant continu, c.c. 12 W, 220 V

Montage
Fig. 4
Raccorder le KPR à l'aide d'un tube en cuivre de 1/4 in ou d'un tube capillaire.
Normalement, il n'est pas nécessaire d'utiliser une boucle amortisseuse pour amortir les pulsations de l'installation.
La console de montage peut être livrée. Voir fig. 10.
Eviter de faire le raccordement dans une poche de liquide ou près d'une telle poche.

Fig. 5 et 6
Maintenir fixement la tubulure de raccordement au serrage et au desserrage de l'ecrouunion flare!

Connexion électrique
Fig. 2 et 3
L'appareil est pourvu d'une gaine permettant le passage de câbles de 6 à 14 mm (15, fig. 1).
Un raccord de câble tube électr. de 13.5 peut être livré comme accessoire (fig. 12).

Essai
Fig. 7
Basculer le bras inférieur 24.
NB! A l'essai, utiliser uniquement la méthode indiquée!

Ne jamais actionner le système de contact directement au moyen d'un tournevis ou d'un outil analogue!

Réglage
Fig. 8 et 9
Desserrer la vis de verrouillage entre les tiges de réglage.
Régler la pression d'arrêt ou de démarrage à l'aide de la tige de gamme 1; la pression peut être lue sur l'échelle «STOP/START».

Régler le différentiel au moyen de la tige 2; il peut être lu sur l'échelle «DIFF».
Après réglage, resserrer la vis de verrouillage.

A. *Réglage basse pression avec le KPR 1*
Voir fig. 2 et 4.
On désire que le moteur du compresseur s'arrête à une diminution de la pression et qu'il démarre à une augmentation de la pression.
Régler la pression de démarrage à l'aide de la tige de gamme 1. Un tour de la tige ~ 0.7 bar.
Différentiel = pression de démarrage moins pression d'arrêt.
Régler le différentiel à l'aide de la tige 2. Un tour de la tige ~ 0.15 bar.
NB! La pression d'arrêt doit se situer audessus du vide absolu (p_e = –1 bar)! Donc, si le compresseur frigorifique ne s'arrête pas aux basses pressions d'arrêt, contrôler si le différentiel n'est pas réglé à un trop grande valeur.
Contrôler la pression et démarrage et la pression d'arrêt au moyen d'un manomètre!

B. Réglage haute pression (régulation de la pression de condensation) avec le KPR 5. **Voir fig. 3 et 4.**
On désire que le ventilateur du condenseur démarre à une augmentation de la pression et qu'il s'arrête à une diminution de la pression.
Régler la pression de démarrage à l'aide de la tige de gamme 1. Un tour de la tige ~ 2.3 bar.
Différentiel = pression de démarrage moins pression d'arrêt.
Régler le différentiel à l'aide de la tige 2.
Un tour de la tige ~ 0.28 bar.
Contrôler la pression de démarrage et la pression d'arrêt à l'aide d'un manomètre!

© Danfoss A/S (AC-RCM, nl) 03 - 2000

Instructions

Pressure control KP 7ABS and KP 7BS

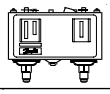

KP 7BS: CFC, HFC, HCFC
KP 7ABS: NH_3 (R 717)

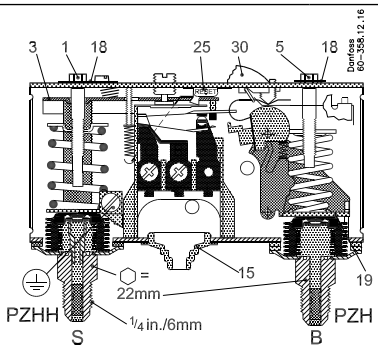

Fig 1

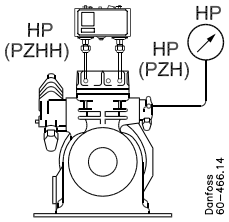

Fig. 2

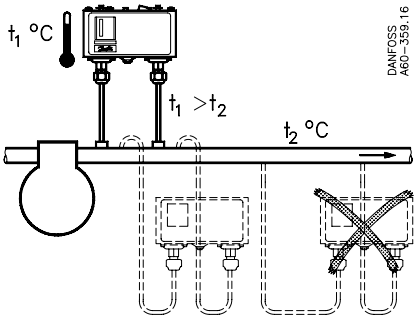

Fig. 3

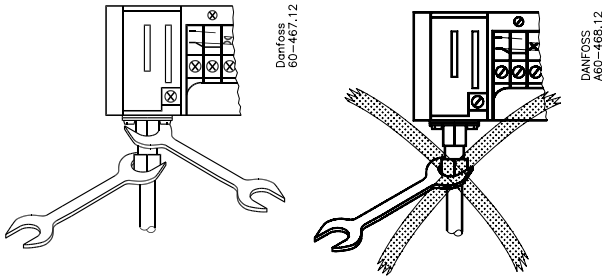

Figl 4

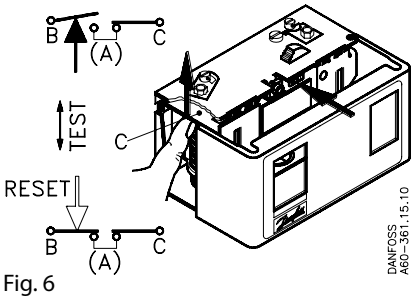

Fig. 6

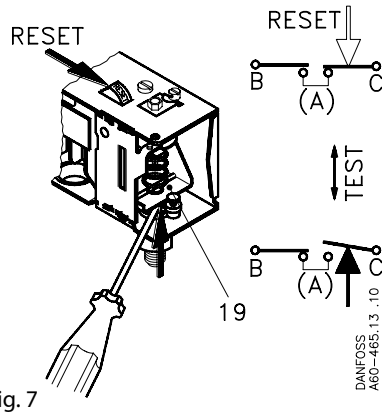

Fig. 7

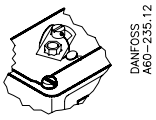

Fig. 11

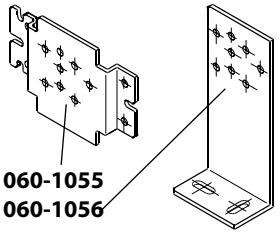

Fig. 12

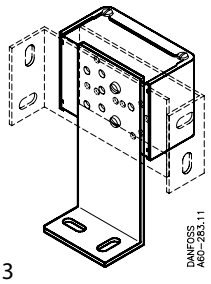

Fig. 13

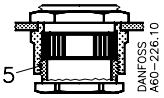

50 stk./pcs./Stck./piéces
060-1059

Fig. 14

SPST standard

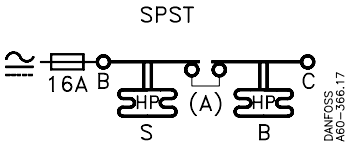

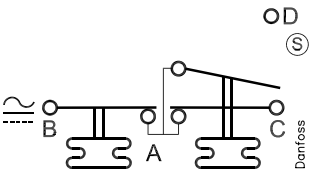

SPST contacts + signal 060-5072

Contact B-A opens on pressure rise
Contact C-A opens on pressure rise

Fig. 6

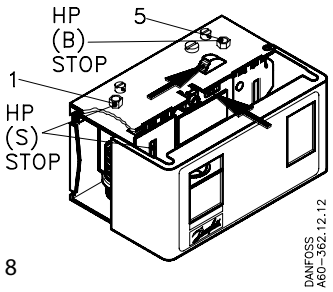

Fig. 8

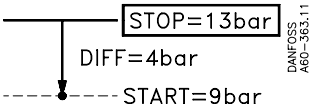

Fig. 9

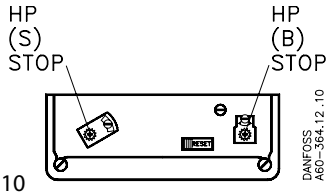

Fig. 10

Dual high pressure control

Tested and approved TÜV (Technischer Überwachungs Verein) in accordance with EN 12263

B = Druckbegrenzer
(Pressure control with external reset)
S = Sicherheitedruckbegrenzer
(Pressure control with internal reset)

In compliance with EN 12263, a rupture of the high pressure bellows in the control will stop the refrigeration plant compressor. It will not be possible to restart the compressor until the pressure control has been replaced.
A rupture of the outer bellows will cause the break pressure of the control to fall approx. 3 bar under the set value. This means that the control will break at normal condensing pressure, i.e. a „fail safe" function is ensured.
The B side can be reset with the external button when the pressure has fallen approx. 4 bar under the set stop pressure.
The S side can be reset with the internal button when the pressure has fallen approx. 4 bar under the set stop pressure.

Fig. 1

1. Range spindle, S-side
3. Main arm
5. Range spindle, B-side
15. Cable entry
18. Locking plate
19. Arm

Technical data
Permissible ambient temperature
–25°C to +65°C (+80°C for max. 2 h)
Range: 8 → 32 bar (p_e)
Relative humidity: 30 to 98 %
Vibration resistance: 4g (10 to 1000 Hz)
Max. permissible test pressure: 35 bar (p_e)
Max. working pressure: 35 bar (p_e)

Enclosure
In accordance with EN 60529:
IP 30 (VDE).
It is assumed that the control will be mounted on a smooth panel or bracket. The bracket must be positioned on the unit so that all clear holes are covered. See fig. 13.

Contact load
See the S scale in the control.
Max. start current = 112 A, 380 V.
Short circuit protection: Fuse 16Amp.
Application in accordance with UL-requirements:
120 V a.c.: 16 FLA, 96 LRA
240 V a.c.: 8 FLA, 48 LRA
240 V d.c.: 12 W pilot duty

Fitting
The KP 7BS is fitted with a damping orifice. It is therefore not usually necessary to use damping coils. The KP 7BS is connected with 1/4 in. copper tube.

Figs. 2 and 3
As far as possible, position the control above the plant piping system.
A mounting bracket can be supplied. See fig. 12.
Avoid connection in or near liquid pockets.

Fig. 4
When tightening or loosening the flare coupling, hold the connector steady by applying a counterforce.

Electrical connection
Fig. 5
The control is equipped with a cable entry for 6 - 14 mm cable (15, fig. 1). This Pg 13.5 entry can be obtained as an accessory (fig. 14).
Use terminals B and C.
The order in which they are used is not important.
Terminal A must not be used.

Testing
Fig. 6
S side
Tilt the main arm (3). At the same time operate the internal RESET button

Fig. 7
B side
Tilt the arm (19) with, for example, a screwdriver. At the same time operate the external RESET button. Be careful not to damage the bellows with the screwdriver!

NOTE! Use only the methods shown when testing.
The contact system must never be activated with a screwdriver or similar tool.

Setting
Fig. 8
Set the stop pressure on the STOP scales. Check the set pressure with a pressure gauge. Set the S side 2 - 3 bar higher than the B side. The differential is fixed at approx. 4 bar.
The compressor motor can be restarted after stop by pressing the RESET buttons. Restart is possible only when the pressure has fallen approx. 4 bar under the set stop pressure.

Fig. 9
Setting example.
Required stop pressure = 13 bar (p_e)
Differential = 4 bar.

The compressor can be restart when the pressure has fallen to 13 – 4 = 9 bar. Set the required stop pressure.

Fig. 10
Locking the setting.
The range spindles can be locked with the locking plates.

Fig. 11
Locking and sealing.

Accessories
Fig. 12
Two types of mounting brackets (wall bracket and angle bracket) complete with screws and washers can be supplied.

Fig. 13
Positioning the angle bracket.

Fig. 14
Pg 13.5 screwed cable entry with special nut. To be ordered separately. For use with 6 - 14 mm cable.
With 8-16 mm cable use a standard Pg 16 screwed cable entry.

©Danfoss A/S DKRCCPICAOB157-520H1364

INSTRUCTIONS

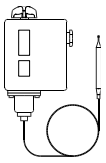

RT 3, 9, 10, 13

017R9503

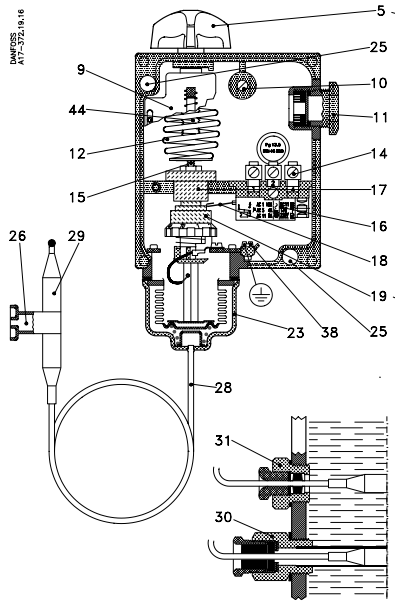

Fig. 1

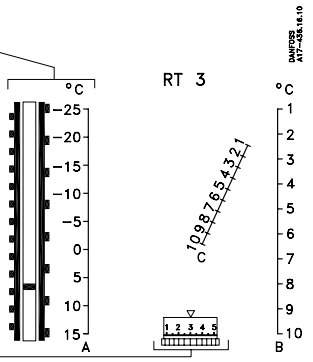

Differens
Differential
Differenz
Différential
Diferencial
Differenziale
Ero
デファレンシャル
Дифференцал

Fig. 2

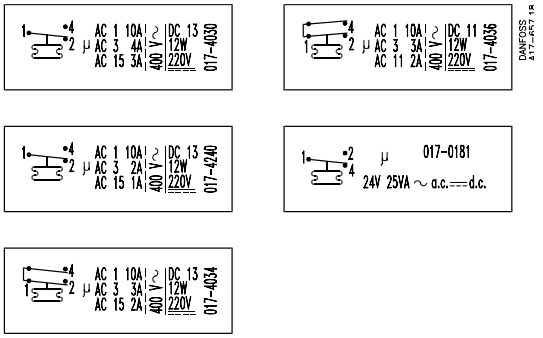

Fig. 3

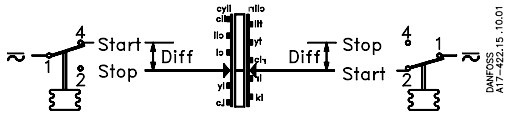

Fig. 4

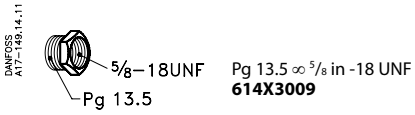

Fig. 5

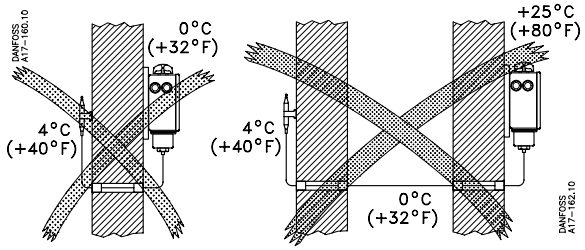

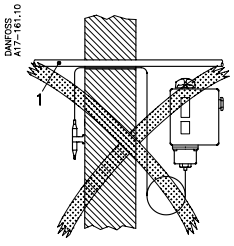

Placér altid føleren koldest
Always place the bulb in the coldest position
Fühler stets am kältesten anordnen
Placez toujours le bulbe au plus froid
Coloque siempre el sensor en la posición más fría
Sistemare sempre il bulbo nella posizione più fredda
Voeler altijd op de koudste plaats aanbrengen
Tuntoelin asennetaan aina kylminpään paikkaan
センサーはつねに本体より
低温の場所に取付ける。
Всегда помещать чувств. Элемент в самую
холодную позицию.

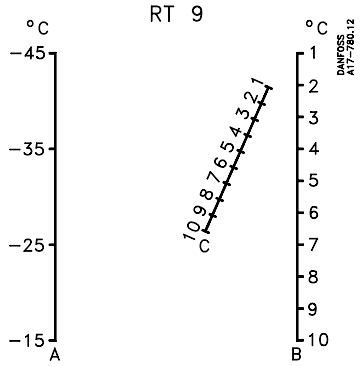

Fig. 7

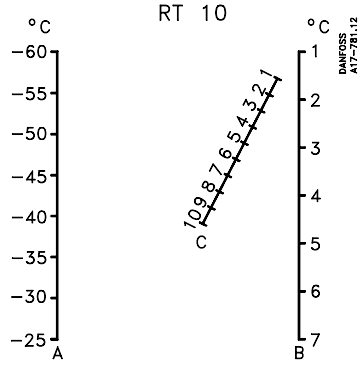

Fig.8

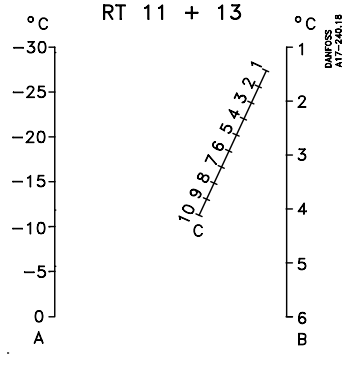

Fig. 9

© Danfoss A/S

DANSK

Termostater

Tekniske data

Fyldning	Type	Område °C	Maks. till. føler-temperatur °C
Damp-fyldning	**RT 3**	–25 til +15	+150
	RT 9	–45 til +15	
	RT 10	–60 til –30	
	RT 13	–30 til 0	+65

Omgivelsestemp: –50°C til +70°C (–50T70).
Min. temperaturændringshastighed: < 1 K /15 minutter.
Kapsling: IP 66 iht. IEC 529.
Kontaktbelastning: Se kontaktdækslet eller fig. 3.
Mærkningen, f.eks. 10 (4) A, 400 V ~ a.c. angiver, at der maks. må tilsluttes 10 A ohmsk og 4 A induktiv belastning ved 400 V ~.
Den maksimale startstrøm ved indkobling af motor (L.R.) må være op til syv gange den induktive belastning – dog maks. 28 A.
RT termostaterne er godkendt iht. VDE* 0660, Prüfklasse II.
*VDE = Verband: Deutscher Elektrotechniker

Montering. Se fig. 6
Benyt monteringshullerne 25.
Ved dampfyldte termostater skal føleren altid placeres koldest.
Kapillarrøret må ikke føres gennem et rum, der er koldere end det, føleren skal monteres i, og det må ikke føres gennem samme rør som sugeledningen 1. Føleren fastgøres til væggen ved hjælp af en følerholder 26.
Ønskes føleren monteret i en vand- eller brinetank kan dette udføres enten med en kapillarrørspakdåse 31 eller ved hjælp af et dykrør 30. 31 og 30 kan leveres som tilbehør. Se "Tilbehør".

El-tilslutning. Se fig. 4.
START = slutte. STOP = bryde. DIFF. = differens. Kabeldiameter: 6-14 mm. Jordforbindelse tilsluttes jord-skruen 38. Genmontér beskyttelseshætten.

Indstilling. Se fig. 1, 2 og 4
Termostaten indstilles på laveste aktiveringstemp. (områdeindstilling). Indstillingen udføres med hånd-knappen 5 under samtidig aflæsning af hovedskalaen 9. Differensen indstilles med differensrullen 19 efter det pågældende nomogram. Højeste aktiveringstemperatur er lig summen af indstillingstemperatur og differens.

Eksempel: Termostat RT 3.
Områdeindstilling (laveste aktiveringstemp.) = +5°C.
Ønsket differens = 2°C
Af nomogrammet ses, at differensrullen 19 skal ind-stilles på 3.
Højeste aktiveringstemperatur = 5 + 2 = 7°C.
Tilslutning til klemme 1-4:
Kontaktsystemet **bryder**, når temp. er faldet til +5°C og slutter, når temp. igen er steget til +7°C.
Tilslutning til klemme 1-2:
Kontaktsystemet **slutter**, når temp. er faldet til +5°C og bryder, når temp. igen er steget til +7°C.

Generelt gælder, at en drejning på håndknappen automatisk flytter både højeste og laveste aktiverings-temp. (bryde og slutte) op eller ned på grund af den uændrede differens.
En drejning på differensrullen vil derimod kun ændre den højeste aktiveringstemp.

Tilbehør

1/2 RG kapillarrørspakdåse (pos. 31)	017-4220
Sml. dykrør for følerlængder op til 110 mm (pos. 30)	993N3568
Sml. dykrør for følerlængder op til 180 mm (pos. 30)	993N3569
Tilbehørspose med to følerklemmer	993N3500
Tilbehørspose med følerholder til vægmontering, fire kapillarrørsbøjler og ni 12 mm stifter (pos. 26)	017-4157
Spec. kabelforskruning, Pg 13.5 udv. × 5/8 in – 18 UNF indv. (fig. 5)	614X3009

ENGLISH

Thermostats

Technical data

Charge	Type	Range °C	Max. permissible bulb temperature °C
Charge	**RT 3**	–25 - +15	+150
	RT 9	–45 - +15	
	RT 10	–60 - –30	
	RT 13	–30 - 0	+65

Ambient temperature: –50°C to +70°C (–50T70).
Min. temperature variation rate: < 1 K /15 minutes.
Enclosure: IP 66 to IEC 529.
Contact load: See switch cover or fig.3.
The marking, e.g. 10 (4) A, 400 V ~ a.c. means that max. connection current is 10 A ohmic and 4 A inductive at 400 V ~.
The max. starting current on motor cutin (L.R.) may be up to seven times the inductive load – but max. 28A.
The RT thermostats are approved to VDE* 0660, Prüfklasse II.
*VDE = Verband Deutscher Elektrotechniker

Fitting. See fig. 6
Use the mounting holes 25.
In the case of vapour fade-out charged thermostats the bulb must always be placed in the coldest position.
The capillary tube must not be run through rooms which are colder than the one in which the bulb is to be installed, and it must not be run through the same entry as the suction line 1.
The bulb should be fixed to the wall by means of the bulb holding bracket 26.
If it is desired to install the bulb in a water or brine tank this can be done by using either a capillary stuffing box 31 or a bulb pocket 30, 31 and 30 can be obtained as accessories. Refer to "Accessories".

Mains connection. See fig. 4
= make. STOP = break. DIFF. = differential. Cable diameter: 6-14 mm.
The earth terminal 38 should be connected to earth. Refit protective cap.

Adjustment. See figs. 1, 2 and 4
Set the thermostat for minimum actuating tempera-ture (range setting). Setting is done by rotating the knob 5, at the same time reading the main scale 9.
The differential is set by rotating the differential adjustment nut 19 according to the nomogram concerned.
Maximum actuating temperature is the sum of the temperature setting and the differential.

Example: Thermostat RT 3.
Range setting (min. actuating temp.) = +5°C Actual differential = 2°C
It will be seen from the nomogram that the differential adjusting nut 19 must be set to 3.
Max. actuating temperature = 5 + 2 = 7°C.
Connection to terminals 1-4:
The switch **breaks** the circuit when the temperature has fallen to +5°C, and makes it when the temperature has again risen to +7°C. Connection to terminals 1-2: The switch **makes** the circuit when the temperature has fallen to +5°C, and breaks it when the temperature has again risen to +7°C.

In general, turning the knob automatically moves both the maximum and minimum actuating temperatures (break and make) up or down because of the fixed differential.
On the other hand, turning the differential adjusting nut only alters the maximum actuating temperature.

Accessories

1/2 BSP capillary stuffing box (pos. 31)	017-4220
Bulb pocket assembly for bulb lengths of up to 110 mm (pos. 30)	993N3568
Bulb pocket assembly for bulb lengths of up to 180 mm (pos. 30)	993N3569
Accessory kit with two bulb clips	993N3500
Accessory kit with bulb holding bracket for wall mounting, four capillary tube clips, and nine nails 12 mm (pos. 26)	017-4157
Special type screwed cable entry, Pg 13.5 ext. × 5/8 in - 18 UNF int. (fig. 5)	614X3009

DEUTSCH

Thermostate

Technische Daten

Füllung	Typ	Bereich °C	Max. zul. Fühler-temperatur °C
Dampf-füllung	**RT 3**	–25 - +15	+150
	RT 9	–45 - +15	
	RT 10	–60 - –30	
	RT 13	–30 - 0	+65

Umgebungstemp.: –50°C bis +70°C (–50T70). Min. Temperaturänderungsgeschwindigkeit:
< 1 K /15 Minuten.
Schutzart: IP 66 gemäß IEC 529.
Kontaktbelastung: Siehe Kontaktdeckel oder Fig. 3. Aus der Kennzeichnung, z.B. 10 (4) A, 400 V ~ a.c. geht hervor, daß max. ein Anschluß von 10 A ohmscher und 4 A induktiver Belastung bei 400 V ~ zulässig ist.
Der maximale Anlaufstrom beim Anlassen des Motors (L. R.) darf das siebenfache der induktiven Belastung betragen – jedoch max. 28 A.
Die RT Thermostate sind gemäß VDE* 0660, Prüf-klasse II zugelassen.
*VDE = Verband Deutscher Elektrotechniker

Montage. Siehe Fig. 6
Montagelöcher 25 benutzen.
Bei Thermostaten mit Dampffüllung muß der Fühler stets am kältesten angeordnet werden.
Das Kapillarrohr darf nicht durch Räume geführt werden, die kälter sind als die Fühlertemperatur, und es darf nicht mit der Saugleitung zusammen verlegt werden.
An der Wand wird der Fühler mit Hilfe eines Fühlerhalters 26 befestigt.
Soll der Fühler in einem Wasser- oder Soletank montiert werden, so kann dies entweder mit einer Kapillarrohr-stopfbuchse 31 oder mit Hilfe eines Tauchrohrs 30 vorgenommen werden.
31 und 30 sind als Zubehör lieferbar, siehe untem »Zubehör«.

Elektrischer Anschluß. Siehe Fig. 4
START = Schliessen. STOP = Öffnen. DIFF = Differenz.
Kabeldurchmesser: 6-14 mm.
Die Erdleitung ist an die Erdungsschraube 38 anzuschliessen.
Schutzkappe wieder montieren.

Einstellung. Siehe Fig. 1, 2 und 4
Der Thermostat ist auf die untere Ansprech-temperatur einzustellen (Bereichseinstellung). Die Einstellung erfolgt mit dem Einstellknopf 5 unter gleichzeitigem Ablesen der Hauptskala 9. Die Differenz wird mit der Differenzrolle 19 auf Grund des jeweiligen Nomogramms eingestellt. Die obere Ansprechtem-peratur ist gleich der Summe von Einstelltemperatur und Differenz.

Beispiel: Thermostat RT 3.
Bereichseinstellung (untere Ansprechtemperatur) = +5°C
Differenz = 2°C.
Differenzeinstellung mit der Differenzrolle = 3. Obere Ansprechtemperatur = 5 + 2 = 7°C.
Anschluß an Klemmen 1-4:
Das Kontaktsystem **öffnet**, wenn die Temperatur auf +5°C abgefallen ist, und schließt, sobald die Temperatur wieder auf +7°C angestiegen ist.
Anschluß an Klemmen 1-2.
Das Kontaktsystem **schließt** wenn die Temperatur auf +5°C abgefallen ist, und öffnet, sobald die Temperatur wieder auf +7°C angestiegen ist.

Allgemein gilt, daß beim Drehen des Einstellknopfes sowohl die obere als auch die untere Ansprech-temperatur (Öffnen und Schließen) automatisch gleich viel verstellt werden, weil die Differenz ungeändert ist.
Beim Drehen der Differenzrolle wird dagegen nur die obere Ansprechtemperatur geändert.

Zubehör

Kapillarrohrstopfbuchse, R 1/2 (Pos. 31)	017-4220
Komplettes Tauchrohr für Fühlerlängen bis zu 110 mm (Pos. 30)	993N3568
Komplettes Tauchrohr für Fühlerlängen bis zu 180 mm (Pos. 30)	993N3569
Zubehörbeutel mit zwei Fühlerklemmen	993N3500
Zubehörbeutel mit Fühlerhalter für Wandmontage, vier Kapillarrohr-bügeln und neun 12 mm-Stiften (Pos. 26)	017-4157
Besondere Kabelverschraubung, Pg 13.5 aussen × 5/8 in - 18 UNF innen (Fig. 5)	614X3009

RI.5E.D2.72 © Danfoss A/S

INSTRUCTIONS

060R9748

Pressure Controls
KP 61 → 81

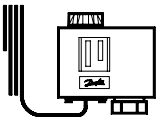

060R9748

KP 61, 62, 63, 68, 69 vapor charge
KP 71, 73, 75, 77, 79, 81 adsorption charge (cross ambient)

Types

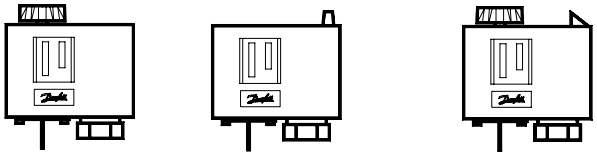

Auto reset | **Manual reset (w/o hand knob)** | **Auto reset w/ hand switch**

Bulb types

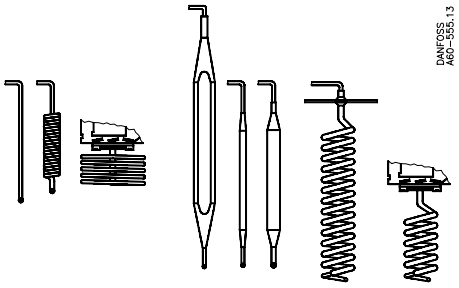

Mounting requirement

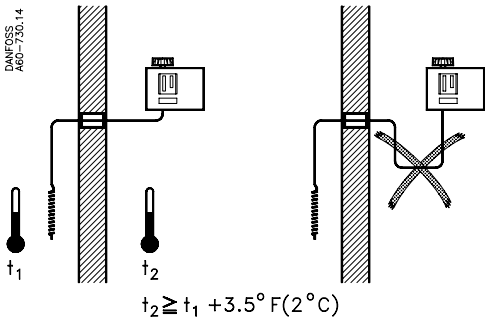

Vapor charge

Max. bulb temperature

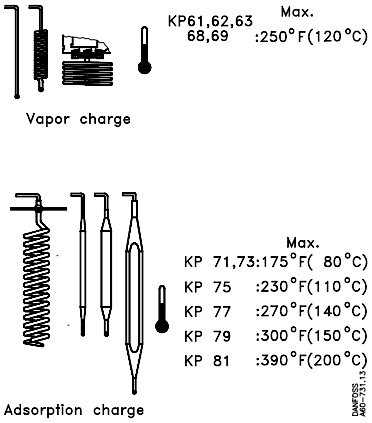

Ambient temperatures

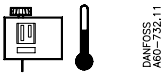

min.−40°F(−40°C)
max. 150°F(65°C)

Enclosure

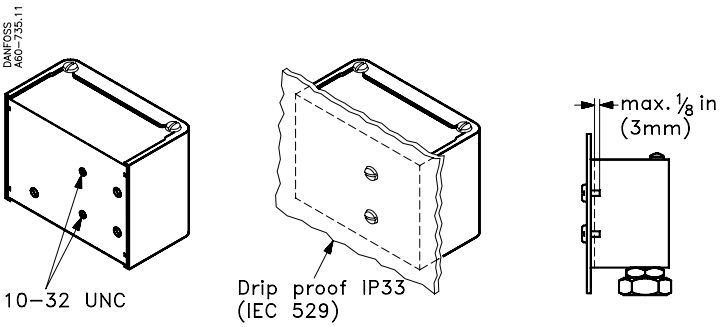

CAUTION: The mounting panel must be plane to avoid damage of control.

Cable entry

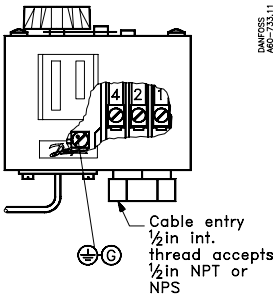

Required cap. tube length on evaporator

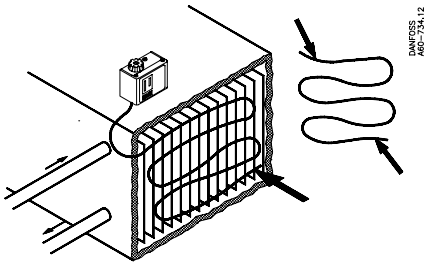

80 in. cap. tube: min. 16 in.
196 in. cap. tube: min. 22 in.

© Danfoss A/S

Wiring

CAUTION: Disconnect power supply before wiring connections are made to avoid possible electrical shock or damage to equipment.
All wiring should conform to the National Electrical Code and local regulations.

Terminal block

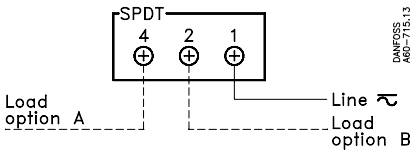

CAUTION: Use terminal screws furnished in the contact block.
Use tightening torque 20 lb. in. (2.3 Nm).
Use copper wire only.

Contact load ratings

120 V a.c.	16 FLA, 96 LRA
240 V a.c.	8 FLA, 48 LRA
240 V .c.	12 W pilot duty

Load Option A

CUT-OUT on temperature drop
Wire terminals 1-4:
CUT-IN = High Set Point (HSP)
see "Setting"
CUT-OUT = Low Set Point (LSP)
see "Setting"

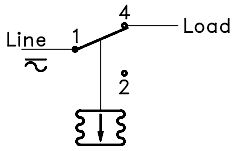

Terms 1-4 close on temperature rise
Terms 1-4 open on temperature drop

Example:	CUT-IN		= +50°F (+10°C)
	CUT-OUT		= +40°C (+4.5°C)
This means			
CUT-IN		= HSP	= +50°F (+10°C)
and			
CUT-OUT		= LSP	= +40°F (+4.5°C)

Note:
⇑ = Bellows movement on pressure rise
⇓ = Bellows movement on pressure drop
The free terminal can be used for signal purpose.

Load Option B

CUT-OUT on temperature rise
Wire terminals 1-2:
CUT-IN = Low Set Point (LSP)
see "Setting"
CUT-OUT = High Set Point (HSP)
see "Setting"

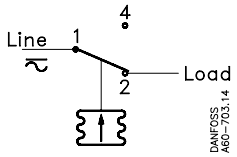

Terms 1-2 close on temperature drop
Terms 1-2 open on temperature rise

Example:	CUT-IN		= +32°F (+0°C)
	CUT-OUT		= +50°F (+10°C)
This means			
CUT-IN		= LSP	= +32°F (+0°C)
and			
CUT-OUT		= HSP	= +50°F (+10°C)

Manual tripping

(Electrical contacts/wiring test)

Note:
use FINGERS ONLY!
(Do NOT use screwdriver)

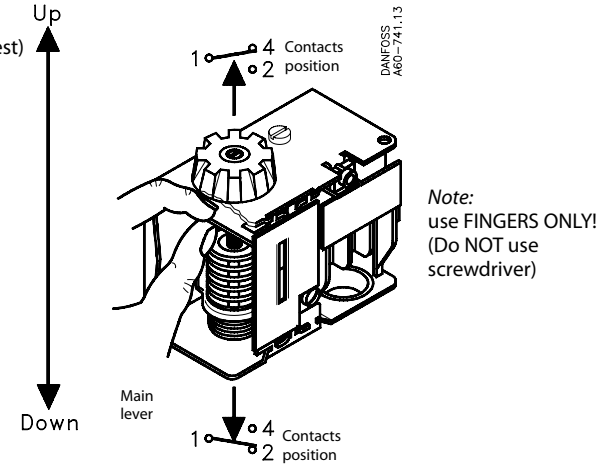

KP w/ auto reset

Note:
use FINGERS ONLY!
(Do NOT use screwdriver)

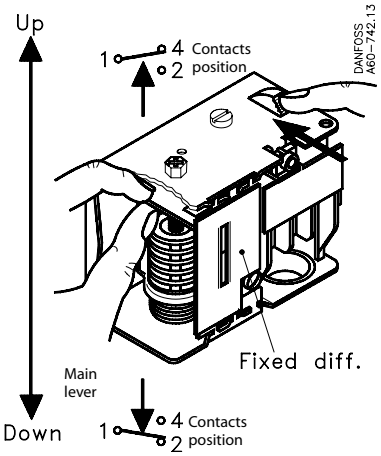

KP w/ manual reset

Note:
Push manual reset knob during manual tripping.

Manual reset

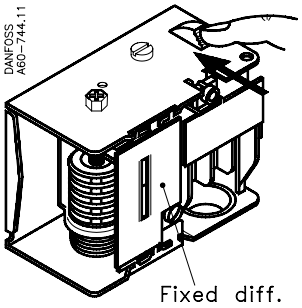

To resume control operation after safety cut-out, push reset knob as indicated.

Note:
Man. reset is possible only after a temperature rise of fixed differential (example 5.4°F)

© Danfoss A/S

Adjustment spindles location

Note!
Remove lockplate before thermostat adjustment. Replace lockplate after adjustment (if desired).

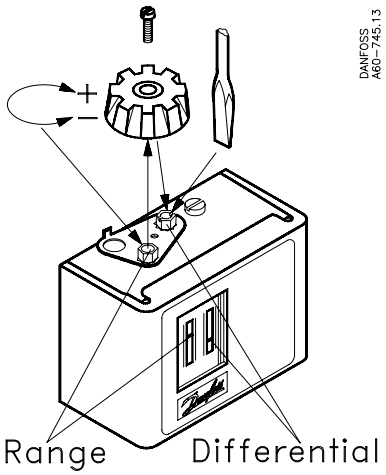

RANGE
See printed instruction on top of control

⊕ increase temp. (warmer): turn CW

⊖ decrease temp. (colder): turn CCW

(use adjustment knob)

DIFFERENTIAL
See printed instruction on top of control

⊕ Increase: turn CW

⊖ decrease: turn CCW

(use adjustment knob or screwdriver)

Determination of differential

For KP w/ vapor charge and auto. reset (KP 61, KP 62, KP 63, KP 68, KP 69): Use graphs to determine correct differential

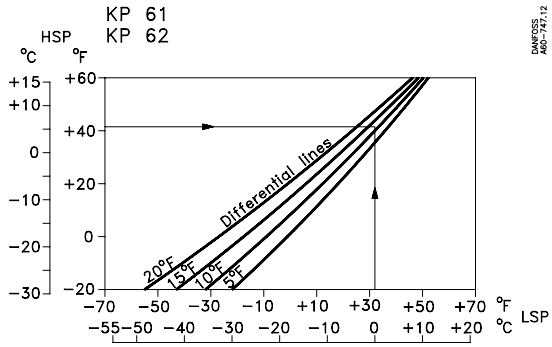

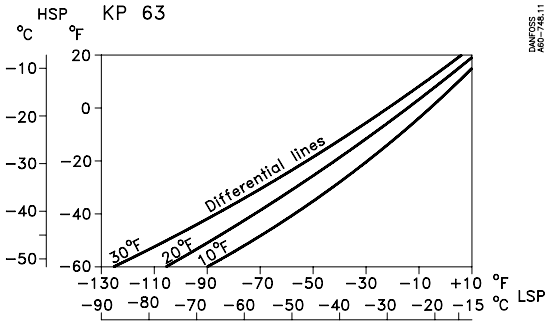

Example:
HSP = +45°F (+5.6°C) => DIFF (from graph):
LSP = +32°F (0°C 13°F (7.2°C) (value which has to be set on diff. scale).

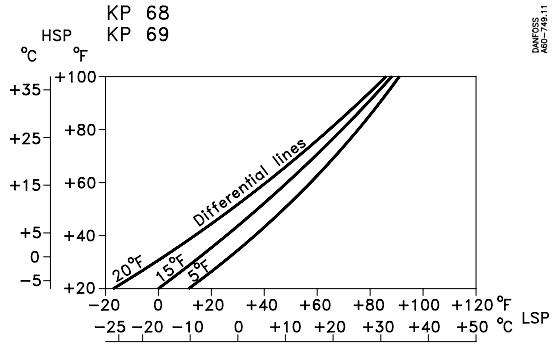

For KP w/ adsorption charge (KP 71, KP 73, KP 75, KP 77, KP 79, KP 81):
The differential will be HSP less LSP

Example:	HSP	–	LSP	=	DIFF.
	45°F	–	35°F	=	10°F
	(7°C)		(5°C)		(2°C)

Note:

(Load Option A)			(Load Option B)		
CUT-IN	=	HSP	or	CUT-IN	=	LSP
CUT-OUT	=	LSP		CUT-OUT	=	HSP

See "Wiring"

Setting

For KP 61, 62, 63, 68, 69, 71, 73, 75, 77, 79 and 81 w/ AUTO RESET

1. Adjust range spindle to desired HIGH SET POINT (use hand knob)
2. Adjust differential spindle to desired DIFFERENTIAL

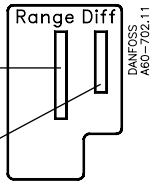

Note:
To find correct differential, see "Determination of differential"

HIGH SET POINT minus DIFFERENTIAL equals LOW SET POINT

Example:

HSP	–	DIFF.	=	LSP
45°F	–	10°F	=	35°F
(7°C)		(5°C)		(2°C)

KP 61 and KP 71 w/ MAN. RESET

1. Adjust range spindle to desired LOW SET POINT
2. DIFFERENTIAL is fixed. Value printed on scale plate

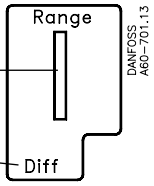

HIGH SET POINT minus DIFFERENTIAL equals LOW SET POINT

Example:

HSP	–	DIFF.	=	LSP
37.4°F	–	5.4°F	=	32°F
(3°C)		(3°C)		(0°C)

KP w/ hand switch

CAUTION:
- Hand switch breaks circuit by micro contact gab.
- Use hand switch for service on refrigeration parts only
- Cut out main switch before service on electrical parts

Switch position	Contacts position
Aut.	Automatic control operation 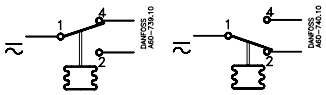
µ Stop	1 and 2 are closed 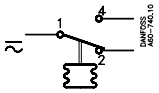

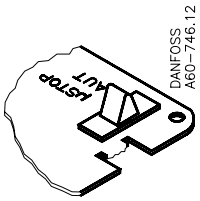

KP 61	060L2003	Vapor charge
KP 73	060L2014	Adsorption charge

© Danfoss A/S

INSTRUCTIONS

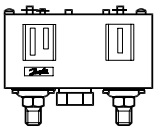

KP 15A

060R9752

The ammonia control can be used with
R 717 (NH_3), CFC, HCFC and HFC refrigerants

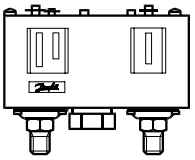

Ambient temperatures

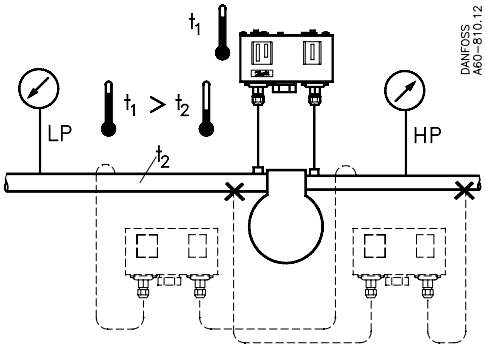

t_1 min .: –40°F (–40°C)
t_1 max.: 65°C (150°F)

CAUTION: Do not mount the control in a position where dirt, sediment or oil will affect the operation of the control.

Test pressure (p_{TEST})

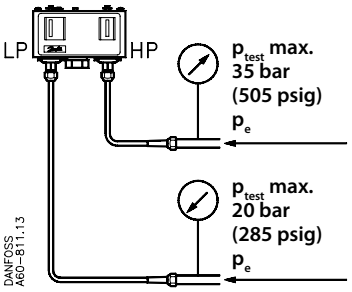

Connections

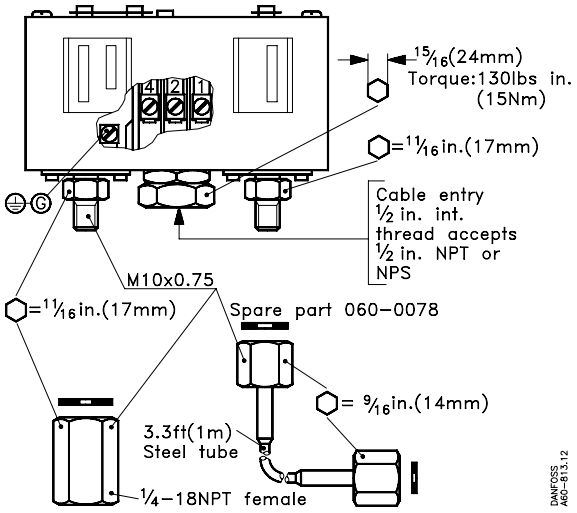

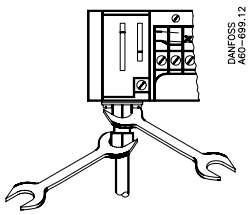

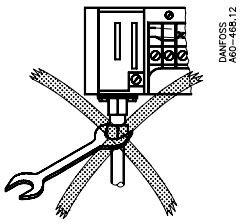

Cutting ring

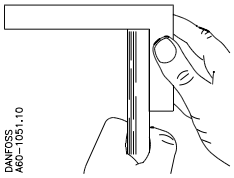

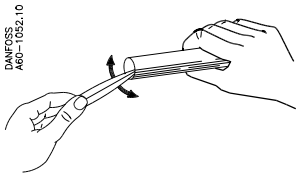

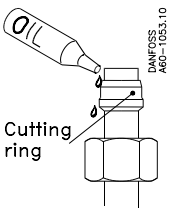

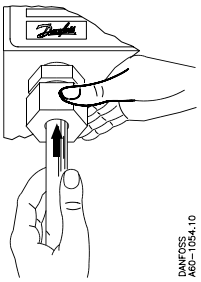

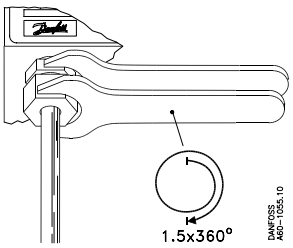

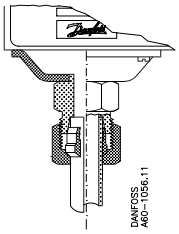

© Danfoss A/S

Enclosure

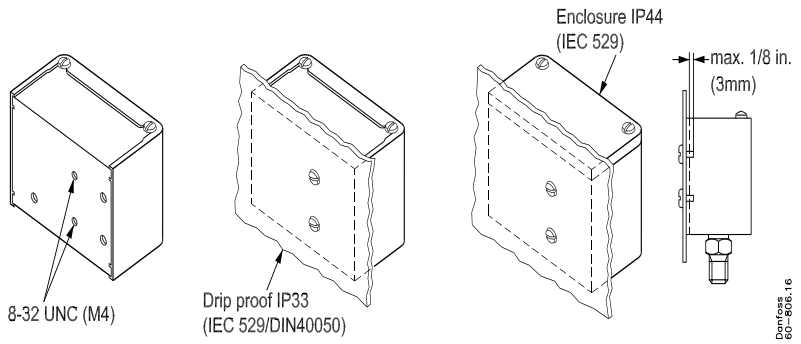

CAUTION: The mounting panel must be plane to avoid damage of control.

Wiring

CAUTION: Disconnect power supply before wiring connections are made to avoid possible electrical shock or damage to equipment.

All wiring should conform to the National Electrical Code and local regulations.

SPDT
Controls with low pressure (LP) signal

Terminal block

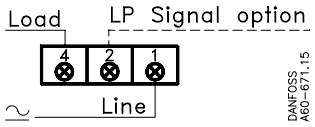

CAUTION: Use terminal screws furnished in the contact block.
Use tightening torque 20 lb. in (2.3 Nm).
Use copper wire only.

Low pressure (LP) side:
A-C close on LP rise
A-C open on LP drop

High pressure (HP) side:
A-C open on HP rise
A-C close on HP drop

LP signal option:
A-B close on LP drop

See label for current wiring inside cover

Controls with low pressure (LP) and high pressure (HP) signal

Terminal block

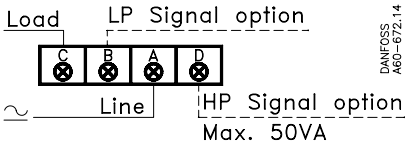

CAUTION: Use terminal screws furnished in the contact block.
Use tightening torque 20 lb. in (2.3 Nm).
Use copper wire only.

Low pressure (LP) side:
A-C close on LP rise
A-C open on LP drop

High pressure (HP) side.
A-C open on HP rise
A-C close on HP drop

LP signal option:
A-B close on LP drop

HP signal option:
A-D close on HP rise

Contact load rastings

120 V a.c.	16 FLA, 96 LRA
240 V a.c.	8 FLA, 48 LRA
240 V d.c.	12 W pilot duty

See label inside cover

Function

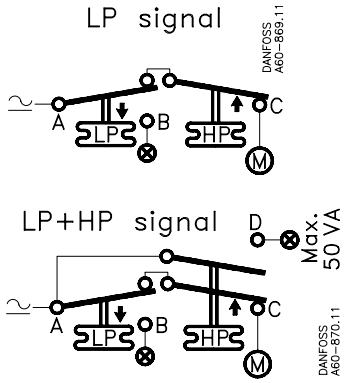

Note!
M = Load
X = Signal option
= Bellows movement on pressure rise
¬ = Bellows movement on pressure drop

RI.5A.I1.22 © Danfoss A/S

Electrical contacts/wiring test

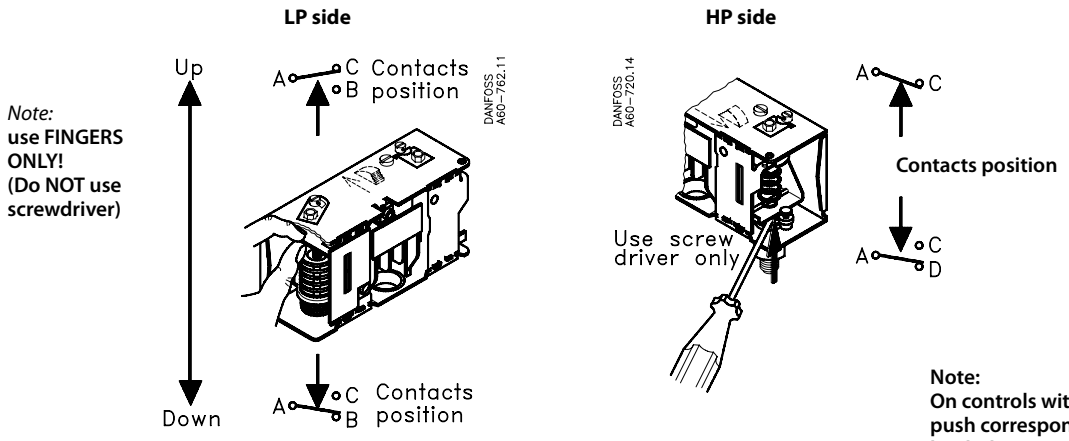

Note:
use FINGERS ONLY!
(Do NOT use screwdriver)

Note:
On controls with LP and/or HP man. reset, push corresponding LP and/or HP man. reset knob during tripping.

Manual reset

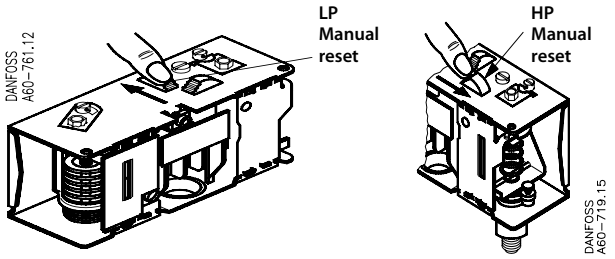

To resume control operation after safety cut-out, push man. reset knob as indicated.

Note:
LP man. reset is possible only after system pressure has risen above cut-in value.

HP man. reset is possible only after system pressure has dropped below cut-out value.

Convertible reset

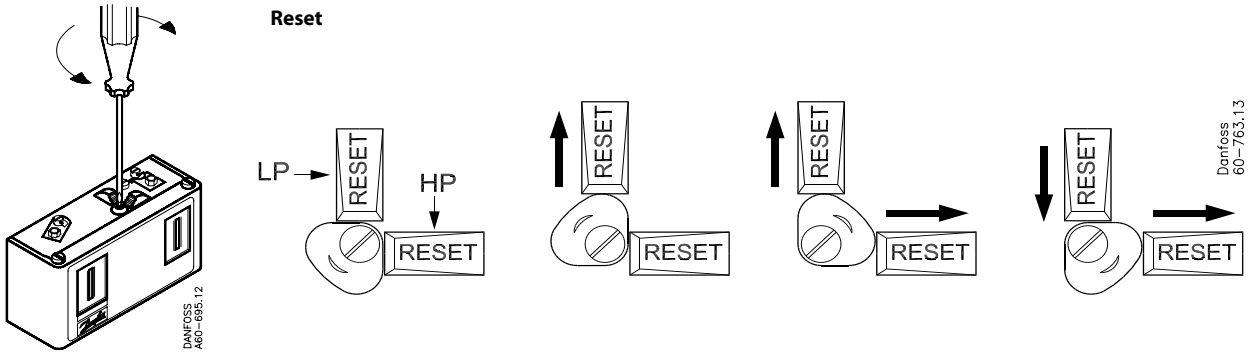

Turn plate to desired reset configuration	LP man. HP-man.	LP-auto. HP-man.	LP-auto. HP-auto.	LP-man. HP-auto.

Adjustment spindle(s) location

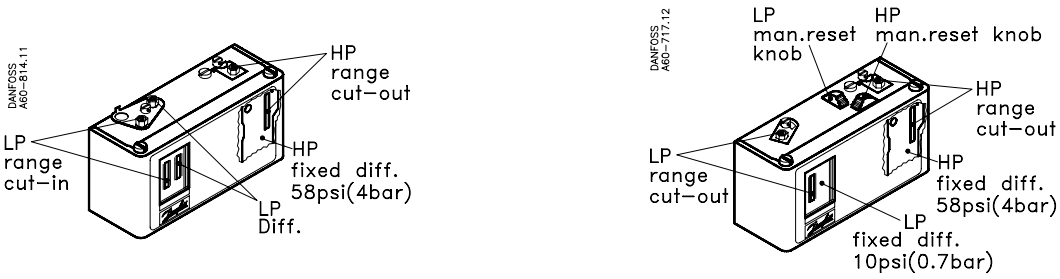

Setting

Low pressure (LP) side setting

KP 15A with LP auto. reset only

1. **Adjust range spindle to. desired CUT-IN value.**
2. **Adjust differential spindle to desired DIFFERENTIAL (DIFF.) value.**

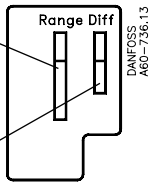

CUT-IN minus DIFFERENTIAL equals CUT-OUT

Example:

CUT-IN	–	**DIFF.**	=	**CUT-OUT**
30 psig	–	**10 psi**	=	**20 psig**
(2.1 bar)	–	**(0.7 bar)**	=	**(1.4 bar)**

KP 15A with LP man. reset only
KP 15A with convertible LP auto./ man. reset

1. **Adjust range spindle to desired CUT-OUT value.**
2. **DIFFERENTIAL (DIFF.) is fixed. Value printed on scale plate.**

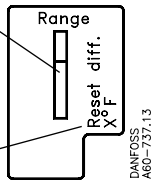

CUT-IN equals CUT-OUT plus DIFFERENTIAL

Example:

CUT-OUT	+	**DIFF.**	=	**CUT-IN**
12 psig	+	**10 psi**	=	**22 psig**
(0.8 bar)	+	**(0.7 bar)**	=	**(1.5 bar)**

High pressure (HP) side setting

KP 15A with HP auto. or man. reset

1. **Adjust range spindle to desired CUT-OUT value.**
2. **DIFFERENTIAL (DIFF.) is fixed. Value printed on scale plate.**

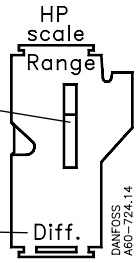

CUT-OUT minus DIFFERENTIAL equals CUT-IN

Example:

CUT-OUT	–	**DIFF.**	=	**CUT-IN**
203 psig	–	**58 psi**	=	**145 psig**
(14 bar)	–	**(4 bar)**	=	**(10 bar)**

Adjustment

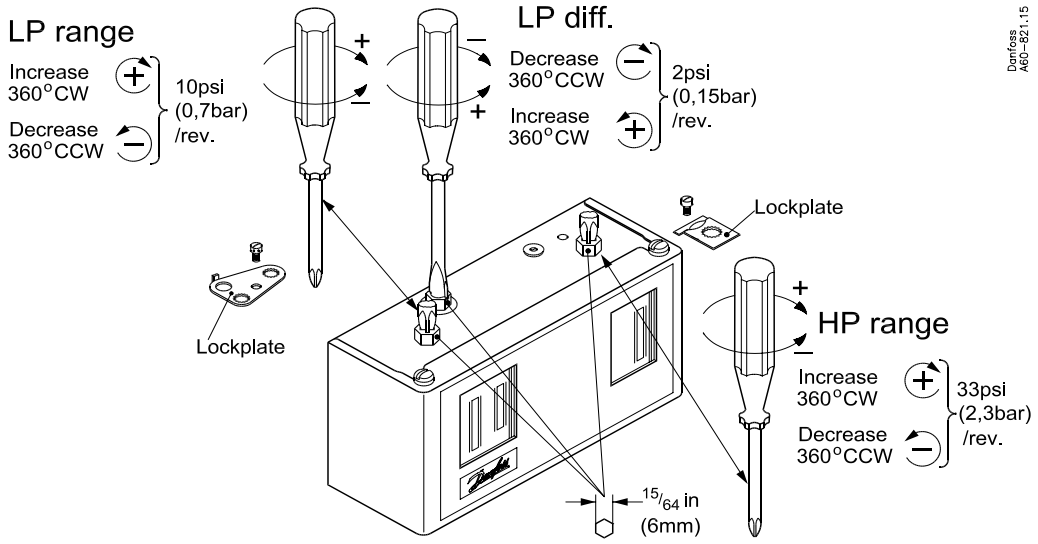

Note:
Remove lockplate before adjustment.
Replace lockplate after adjustment (if desired).

017R9519

Pressure controls
RT1AE, RT6AEW, RT6AEB, RT6AES, RT116E, RT5E, RT117E, RT112E, RT113E, RT260AE, RT262AE

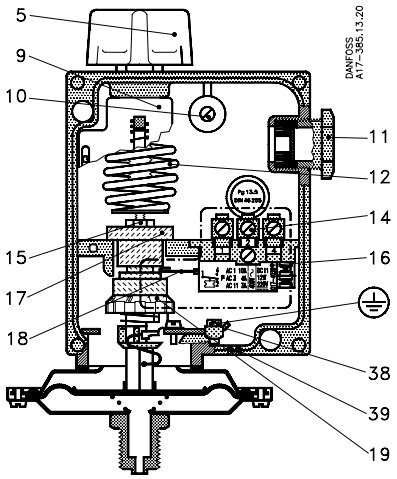

Fig. 1

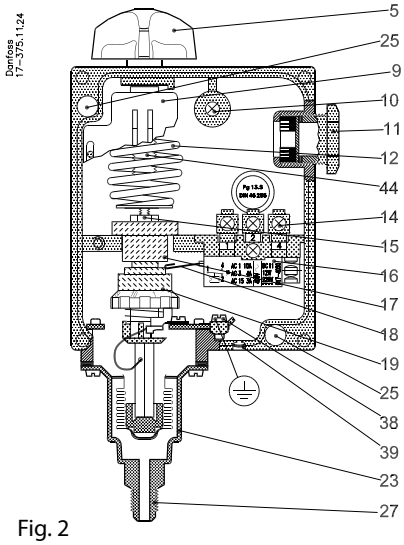

Fig. 2

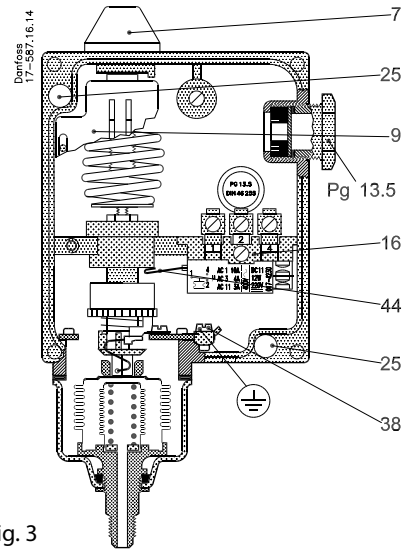

Fig. 3

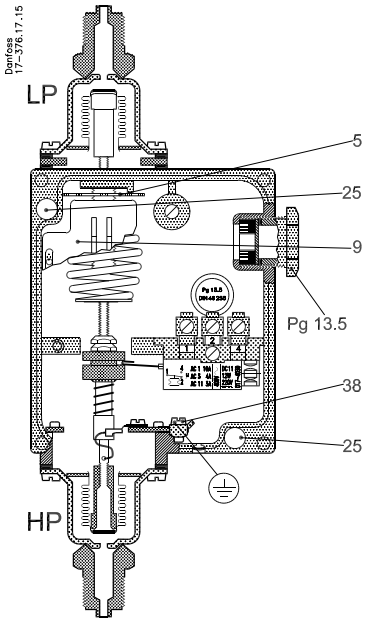

Fig. 4

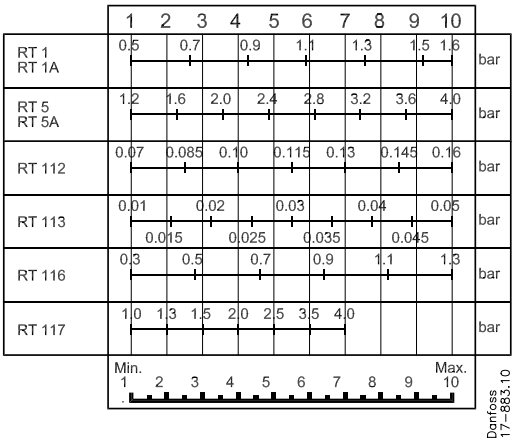

Fig. 5

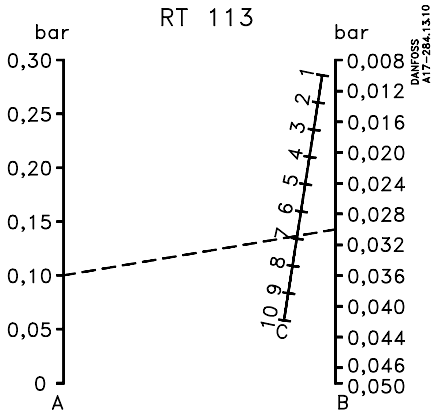

RT113:
A: Range setting
B: Differential obtained
C: Differential setting

Fig. 6

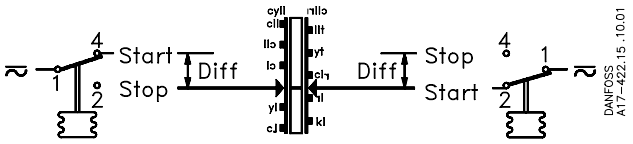

Fig. 7

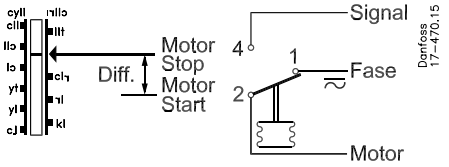

Fig. 8

DKRCCPICB0B102-520H1752

017R9519

Product marking

CE 0539 Ex II2G

DEMKO 05 ATEX 135385X

EEx ia IIC T5 −20°C ≤ Ta ≤65°C

U_i : 29V L_i : 0.2µH

I_i : 0.5A C_i : 0.5nF

P_i : 1W

Technical data

Maximum Working Pressure:

Type	RT113E	RT112E	RT1AE	RT116E	RT5E	RT6AE	RT117E	RT260AE	RT262AE
MWP [bar)	0.4	7	22	22	22	34	42	22	11

Permissible ambient temperature: –20°C to +65°C

Intrinsically safe specification:

U_i = 29V I_i = 0.5A P_i = 1W C_i = 0.5nF L_i = 0.2µH

Contact load: max. 100 mA, 30V a.c./d.c.
min. 1 mA, 5V a.c./d.c.

017R9519

Installation

The RT pressure switch is designed for fitting on the valve panel or the compressor. Use the mounting holes (25). If the unit can be exposend to vibration, it should be mounted on a resilient pad. If pressure pulsations occur in the system at the point where the pressure switch is connected, these should be effectively damped, as for example, by connecting the RT unit to the system via damping coil.

Electrical connection

See fig. 7 and fig. 8.
START = make. STOP = break. DIFF = differential.
Cable diameter: 6-14 mm
The earth terminal (38) should be connected to earth.

Adjustment

RT1AE, RT116E, RT5E, RT117E, RT112E, RT113E
(fig. 1, fig. 2 and fig. 7)

Set the pressure switch for minimum actuating pressure (range setting). Setting is done by rotating the knob (5), at the same time reading the main scale (9).
The differential is set by rotating the differential adjusting nut (19) according to the nomogram concerned (fig. 5 or fig 6).
Maximum actuating pressure is the sum of the pressure setting and the differential.

RT260AE, RT262AE (fig. 4 and fig. 7)

Set the required differential pressure with the setting disc (5) while at the same time reading the scal (9).

RT6AEW, RT6AEB, RT6AES (fig. 3 and fig. 8)

After removing the seal cap (7), set the cut out pressure with the uncovered range spindle while reading the scale (9).

Safety requirements

1) The refrigeration system must always comply with European Ex installation standard, EN 60079-14, any local directive and legislation as well as any other regulation applying in the area of installation.

2) RT-E switch must be used only with reliable means of limiting the voltage and current to prevent sparks between the contact surfaces. The equipment to be used for electrical load limiting must always be approved for use in the zone concerned.

3) Cable and cable entries approved for the application must be used. Cables must not be in contact with sharp edges. The cable must be connected with adequate stress relief in order to prevent that pulling forces can be carried through the cable to the terminal.

4) In the event of pressure pulsations in the system, where the switch is connected, these must be effectively damped to prevent fatigue failure on the bellows. The cycle frequency of the RT-E switch must be kept as low as possible. The vibration level must be kept as low as possible.

5) It is recommended to regularly check the function of the RT-E switch.

6) Only apparatus designed, constructed and released by Danfoss must be used for application concerned. Danfoss can accept no responsibility in case of alterations made on the pressure switches or the use of them against the instructions of Danfoss.

7) Any overload of the RT switch must be prevented. Overloaded or damaged apparatus must be exchanged.

8) Only authorised persons, who are certified in installing and maintaining refrigration system may do the installation, maintenance and exchange of the switch.

9) Use only appropriate tools

10) Dispose of the swith in an environmentally-friendly way.

© Danfoss A/S (AC-DSL/mr) 10 - 2006